USER GUIDE

G4 GEMX™ IntelliFresh® Coffee Brewing System with FreshTrac® Dispenser

Style may vary

Dispenser sold separately

READ AND SAVE THESE INSTRUCTIONS

NOTICE TO INSTALLER: Please leave this booklet with the machine.

Contact Information

Wilbur Curtis Co., Inc.
6913 Acco Street | Montebello, CA 90640 US
Phone: 323-837-2300 | Toll Free: 800-421-6150
Email: csrassistance@wilburcurtis.com | Web: www.wilburcurtis.com
For the latest specifications and information go to www.wilburcurtis.com
Toll Free: 800-995-0417 | Monday - Friday 5:30 A.M. - 4:00 P.M. PT
Email: techsupport@wilburcurtis.com

Due to continued product improvement, the products illustrated/photographed in this guide may vary slightly from the actual product.

Key Features

- Generation Four (G4) Digital Control Module – provides precise control over all aspects of brewing: time, temperature, volume plus specialty coffee needs from pre-infusion to pulse-brewing to water bypass. Large, 4.3” touch screen with icon-driven interface, streamlines operation. On-screen instructions provide fast, intuitive training; reduces service calls.
- Built-in Self Diagnostic System – Includes real-time feedback of the brewing process and energy saving mode.
- IntelliFresh® Technology – Temperature and time information follows the dispenser.
- LED notification of freshness timing.
- Industry’s most effective mineral tolerant design.

Specifications (Selected Models)

Electrical Supply Requirements

MODEL #	DESCRIPTION	PHASE	VOLTS	AMPS	HEATING CONFIG	WIRE	WATTS	HERTZ	CAPACITY
G4GEMXSIFTR10A3026	Single, 1.5 Gal. w/IntelliFresh	1 PH	220 V	18.5 A	2 X 2000 W	3W + G	4050 W	50/60 Hz	12.0 gal./hr. [45.4 L/hr.]

Dimensions / Water Supply Requirements

MODEL #	HEIGHT	WIDTH	DEPTH	SHIP WEIGHT	SHIP CUBE	WATER CONNECTOR	WATER PRESSURE	MIN. FLOW RATE
G4GEMXSIFTR10A3026	33.62” [85.4 cm]	10.50” [26.7 cm]	22.68” [57.6 cm]	51.0 lb. [23.1 kg]	7.0 cu. ft. [0.20 m^3]	3/8” quick connect (supplied)	20 - 90 psi [138 - 620 kPa]	1.0 gpm [3.8 Lpm]

Following are the factory default settings for the IntelliFresh brewer:

- Brew Temperature = 200°F [92°C]
- Water Bypass = On LARGE brew only
- Brew Volume = Large (192 oz. ±8oz./5.7 L ±236 cc)
  Small (60 oz. ±4oz/1.8 L ±118 cc)
- Energy Save Mode = Off
- Quality Timer = 60 Minutes

Symbols

This is the safety alert symbol. It is used to alert you to potential physical injury hazards. Obey all safety messages that follow this symbol to avoid possible injury or death.

DANGER - Indicates a hazardous situation which, if not avoided, will result in death or serious injury.

WARNING - Indicates a hazardous situation which, if not avoided, could result in death or serious injury.

CAUTION - Indicates a hazardous situation which, if not avoided, could result in minor or moderate injury.

NOTICE - Indicates a situation which, if not avoided, could result in property damage.

IMPORTANT - Provides information and tips for proper operation.

SANITATION REQUIREMENTS

WARNING - This product can expose you to chemicals including Acrylamide and Bisphenol A (BPA), which are known to the State of California to cause cancer and birth defects or other reproductive harm. For more information visit www.P65Warnings.ca.gov.

Important Safeguards/Conventions

WARNING:

- Make sure that this appliance is installed and grounded according to the INSTALLATION INSTRUCTIONS by qualified personnel before attempting to use it. Failure to follow the INSTALLATION INSTRUCTIONS could result in personal injury or void the warranty.
- This appliance is designed for commercial use. Any service other than cleaning and preventive maintenance should be performed by an authorized Wilbur Curtis service technician.
- To reduce the risk of fire or electric shock, DO NOT open the service panels. There are no user serviceable parts inside.
- Keep hands, arms and other items away from hot surfaces of the unit during operation.
- Clean the appliance and any dispensers completely before using them for the first time according to the CLEANING INSTRUCTIONS. Clean them regularly as instructed in the CLEANING INSTRUCTIONS.
- Use this appliance only for its intended use, brewing/dispensing hot and/or cold beverages/water.
- This appliance is not intended for use by persons (including children) with reduced physical, sensory or mental capabilities or lack of experience and knowledge, unless they have been given supervision or instruction concerning use of the appliance by a person responsible for their safety. Children should be supervised to ensure that they do not play with the appliance.
- Avoid spillage onto the power (mains) connector.

CE Requirements

- This appliance must be installed in locations where it can be overseen by trained personnel.
- For proper operation, this appliance must be installed where the temperature is between 5°C to 35°C.
- This appliance is not suitable for outdoor use.
- This appliance shall not be tilted more than 10° for safe operation.
- An electrician must provide electrical service as specified in conformance with all local and national codes. For safe use, an all-pole disconnection must be incorporated into the fixed wiring in accordance with the wiring rules outlined in clause 7.12.2 of IEC 60335 for meeting the minimum electrical safety of this standard.
- This appliance must not be cleaned by water jet.
- This appliance can be used by persons aged from 18 years and above if they have been given supervision or instruction concerning use of the appliance in a safe way and if they understand the hazards involved.
- Keep the appliance and its cord out of reach of children aged less than 18 years.
- Appliances can be used by persons 18 years and above with reduced physical, sensory or mental capabilities or lack of experience and knowledge if they have been given supervision or instruction concerning use of the appliance in a safe way and understand the hazards involved.
- Children under the age of 18 years should be supervised to ensure they do not play with the appliance.
- If the power cord is ever damaged, it must be replaced by the manufacturer or authorized service personnel with a special cord available from the manufacturer or its authorized service personnel in order to avoid a hazard.
- Machine must not be immersed for cleaning.
- Cleaning and user maintenance shall not be made by children unless they are older than 18 years and supervised.
- This appliance is intended to be used in household and similar applications such as:

  – staff kitchen areas in shops, offices and other working environments;

  – by clients in hotels, motels and other residential type environments;

  – bed and breakfast type environments.
- This appliance not intended to be used in applications such as:

  – farm houses
- Access to the service areas permitted by Authorized Service personnel only.
- The A-Weighted sound pressure level is below 70 dBA.

WARNING: Installation is to be performed only by a qualified installer.

WARNING: Improper electrical connection may result in an electric shock hazard or damage the unit. This appliance must be properly grounded.

NOTICE: DO NOT connect this appliance to a hot water supply. The water inlet valve is not rated for hot water. Do not exceed the maximum water pressure stated in the *SPECIFICATIONS* section.

IMPORTANT: Observe all governing codes and ordinances.

Installation Instructions

Installation Requirements

- A secure surface capable of supporting the weight of the appliance.
- For units without an attached cord set attached or dual voltage units set up for use with 220 - 240 Volts: Appropriately sized, UL listed, grounding type power cable to meet the electrical specifications for the appliance. If you have questions about the correct cable size and length, consult a qualified installer. If the appliance will be hard wired to a junction box, the power cable must be long enough so that the unit can be moved for cleaning underneath.
- A grounded electrical connection to an electrical circuit that meets the electrical specifications of the appliance (see *SPECIFICATIONS*). The circuit must be protected by the appropriate sized circuit breaker. If you are not certain that the existing circuit meets the requirements for your unit, consult a licensed electrician.
- A water filtration system is required to maintain trouble-free operation. Wilbur Curtis Co., Inc. recommends a Wilbur Curtis approved water filter. See the Curtis Equipment Catalog for a full line of Wilbur Curtis approved water filters.
- Potable water supply line connection from the water filter capable of supplying the minimum flow rate required by the specifications. The water supply line must be able to connect to the flare fitting on the back of the unit. See the *SPECIFICATIONS* section for the correct size. The water line should also be capable of being controlled by a shut off valve. Do not connect the water line to a saddle valve or needle valve.

IEC requires the following water connection:

1. A quick disconnect or additional coiled tubing (at least two times the depth of the appliance) is required so that it can be moved for cleaning underneath.
2. This equipment is to be installed with adequate back-flow protection to comply with applicable federal, state and local codes.
3. Water pipe connections and fixtures directly connected to a potable water supply shall be sized, installed and maintained in accordance with federal, state and local codes.

The International Plumbing Code of the International Code Council and the Food and Drug Administration (FDA) Food Code manual, direct that this equipment must be installed with adequate back-flow prevention in compliance with federal, state and local codes. For units installed outside of the U.S.A., make sure that the installation is in compliance with the applicable plumbing/sanitation code for your area.

Installation

Leveling

WARNING: Use the leveling legs to level the brewer only. Do not use them to adjust brewer height. Do not extend them higher than necessary.

1 Position the brewer on the counter top. Level it left to right and front to back by turning the bottom of the legs.

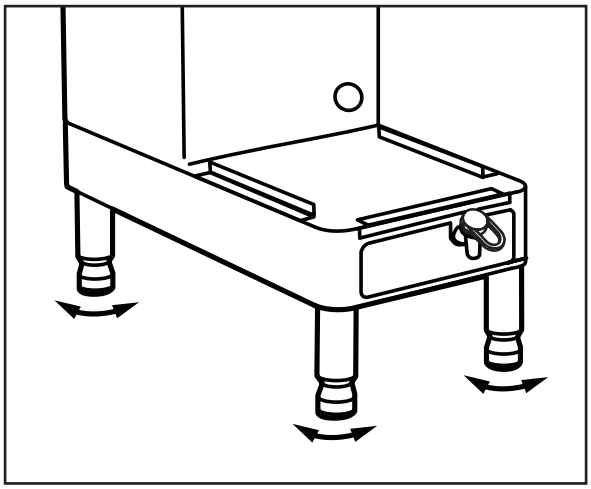

Connect the Water Supply

2 Connect the water supply hose, supplied with the unit, to the water supply valve.

3 Flush the water supply line prior to installation to purge air and debris from the water filter and tubing.

4 Connect the water supply hose to the quick connect fitting on the back of the brewer. Leave the water supply valve closed until the power is connected.

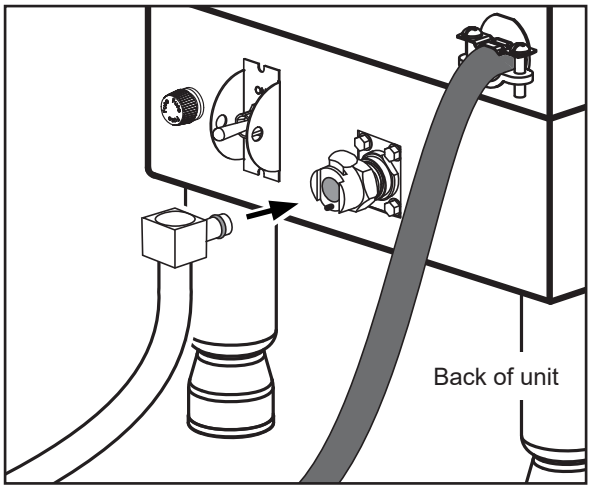

Power Up the Brewer

5 Connect the power plug to the electrical outlet.

WARNING: Connect the power cord only to the appropriate type and size electrical outlet. If it is not compatible, have the electrical outlet upgraded by a licensed electrician. Do not use an extension cord. Do not use a power cord/ plug that is damaged.

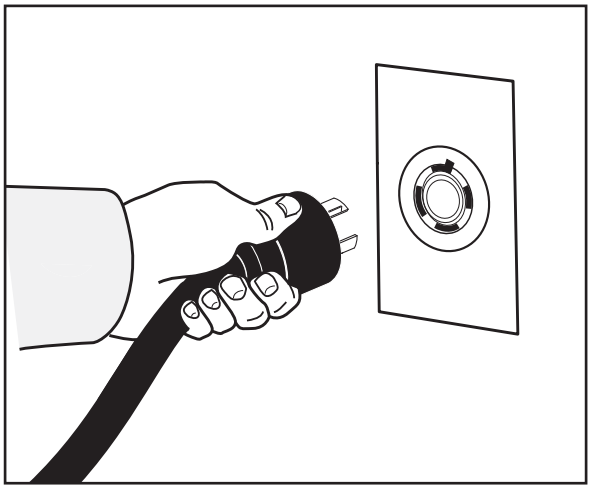

6 Turn on the water supply valve.

7 Turn the toggle switch on the back of the brewer to the ON position. The water tank will start to fill. While the tank is filling, inspect the water supply line for leaks.

8 When the water level in the tank rises to the correct volume, the heating elements will turn on automatically. Depending on the incoming water temperature and the electrical specifications, the water tank typically requires 20 to 30 minutes to reach the factory set operating temperature. When the water has heated, “Ready to Brew” should be on the display.

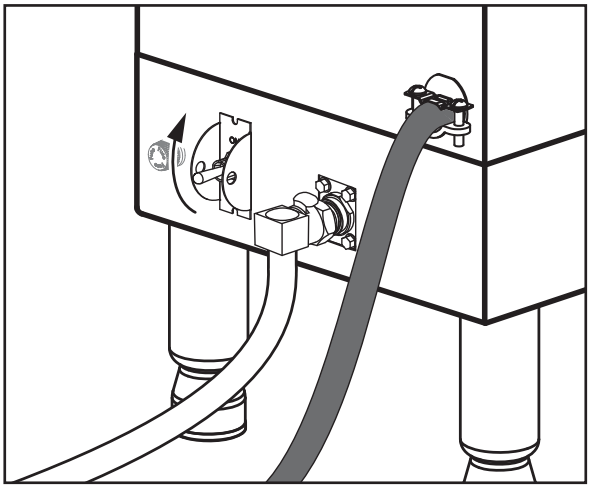

IMPORTANT: When operating the brewer at higher elevations, reduce the factory set operating temperature (200°F/92°C) by 2°F/1°C for each 1000 ft./300 m of elevation above 4000 ft./1200 m. See the *PROGRAMMING GUIDE* section.

9 Before brewing for the first time, dispense 12 oz./350 ml of hot water through the hot water faucet to help purge air from the tubing inside the brewer.

10 Brew a cycle of at least 12 oz./350 ml, to purge any remaining air from the tubing. See *OPERATING INSTRUCTIONS*. During the initial brew cycle and whenever the filter is replaced, you may hear the sounds of air being purged from the filter, tubing and water tank.

Brewing Instructions

WARNING - TO AVOID SCALDING, AVOID SPLASHING. Keep body parts clear of the brewer during brewing. Do not remove the brew basket while “Brewing” appears on the display.

NOTICE - Only use GEM3XR IntelliFresh® dispensers with this GEMX™ series IntelliFresh brewer.

The G4 GEMX Intellifresh brewer is factory preset for optimal performance.

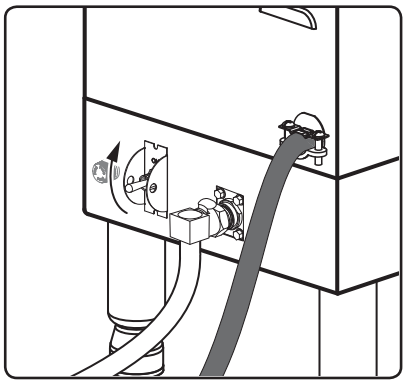

1 The brewer should be ON. Confirm this at the rear toggle switch.

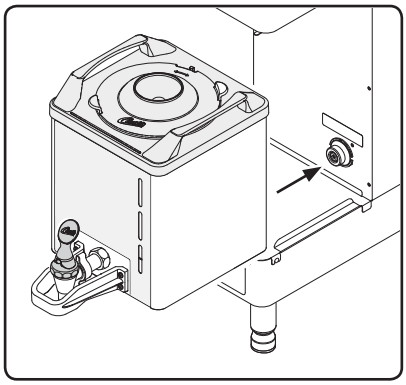

2 Place an empty IntelliFresh dispenser under the brew basket. Make sure that it is connected to the socket on the brewer (LEDs on the front should flash green). The dispenser warmer will activate.

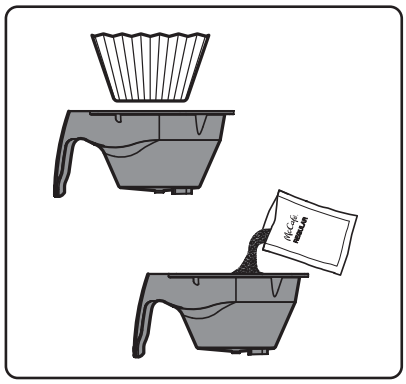

3 Insert a clean paper filter into the brew basket. Pour in three bags of ground coffee (regular or decaf) to brew a large batch or one bag for a small batch.

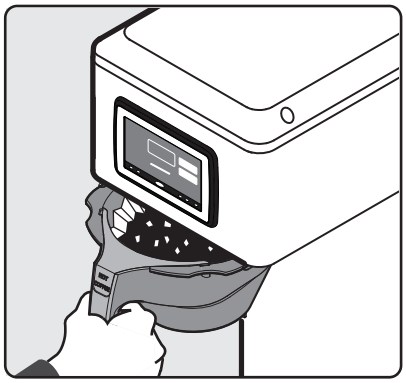

4 Slide the filled brew basket into the brew rails under the control panel. Slide it all the way back until it stops.

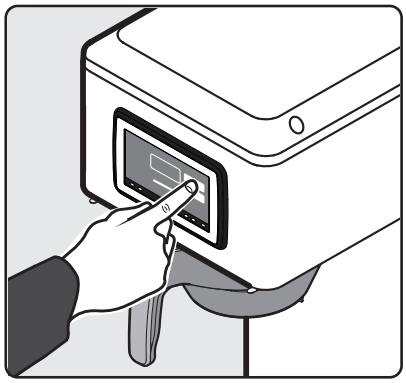

5 “Ready to brew” should be on the display.* Touch “Regular” or “Decaf”, then hold your finger on the appropriate bag icon. As soon as you hear the click of the brew valve, lift your finger. Brewing will begin.

6 If a keypad appears on the display, the brew code feature is enabled (default is off). **Brewing will start immediately after you enter the brew code**. See the *PROGRAMMING GUIDE* to set up/disable the brew code.

The brewer will brew coffee based on the settings programmed into the universal control module (UCM). To change the settings, see the *PROGRAMMING GUIDE* section.

* “DISPENSER LOCKOUT” appears on the display when: 1) the dispenser is not connected to the brewer, 2) the dispenser is not empty or 3) the dispenser is not warm. Preheat a cold dispenser quickly by pouring in 12 oz. (350 ml) min. of hot water, let sit 1 min., then dump out.

IntelliFresh Function and Features

The LED coffee level gauge on the front of the dispenser is also the indicator for the IntelliFresh Quality Timer system. When the quality timer is set to on (default), it alerts you to when the coffee has exceeded the programmed freshness time. The Quality Timer is activated via a signal sent through the connection between the brewer and the dispenser. The freshness time is indicated by the color of the LEDs, provided there is still coffee in the dispenser. Otherwise the LEDs turn off completely.

See the *PROGRAMMING GUIDE* to change the Quality Timer settings, including freshness (quality) time.

NOTE: After the brew cycle is complete, if the GEMX dispenser is transferred from the brewer to a Curtis IntelliFresh warmer stand, the dispenser settings will remain the same.

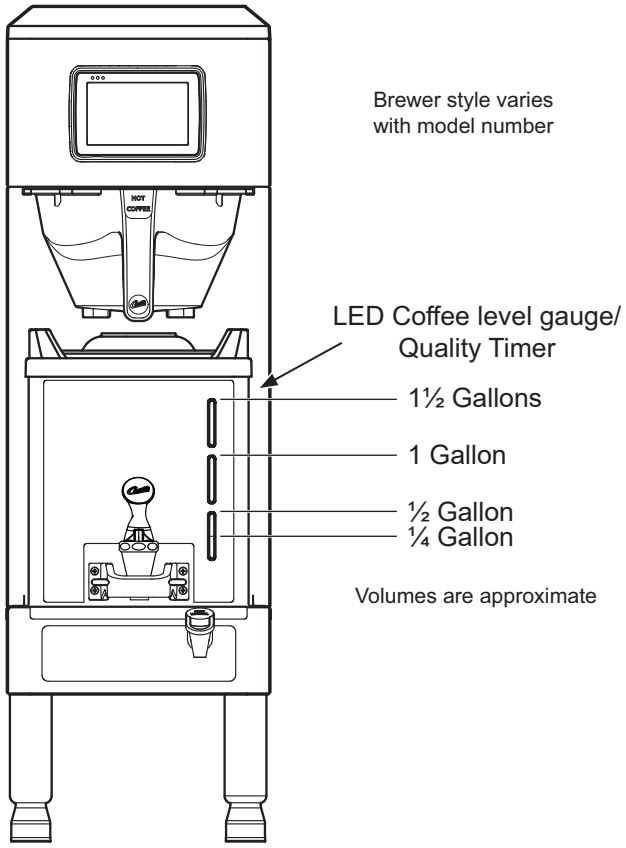

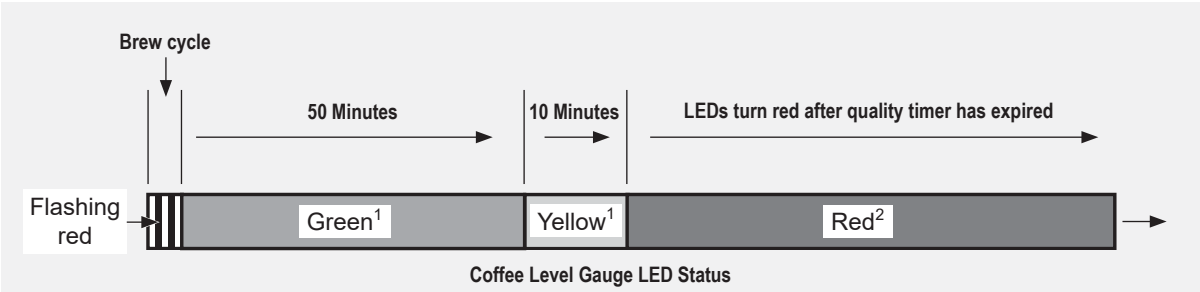

[1]Coffee is fresh
[2]Coffee is no longer fresh

LED Coffee Level Gauge - Intellifresh Quality Timer ON (Default Settings)

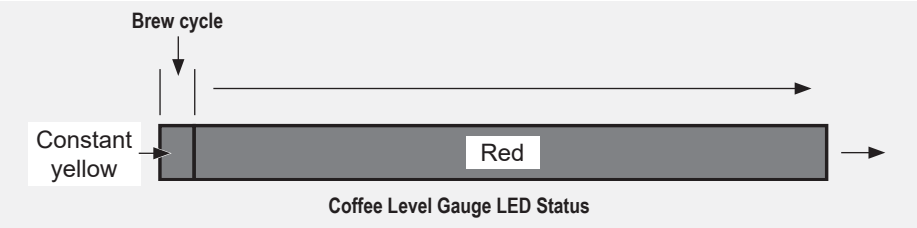

LED Coffee Level Gauge - Quality Timer OFF (Default Settings)

WARNING: HOT SURFACES - To avoid injury, allow the brewer and dispenser(s) to cool before cleaning. Be careful when pouring hot fluids. DO NOT immerse the brewer or dispenser in water or any other liquid. Do not place the dispenser in a dishwasher.

NOTICE - Do not use cleaning liquids, compounds or powders containing chlorine (bleach) or corrosives. These products promote corrosion and will damage the finishes. USE OF THESE PRODUCTS WILL VOID THE WARRANTY.

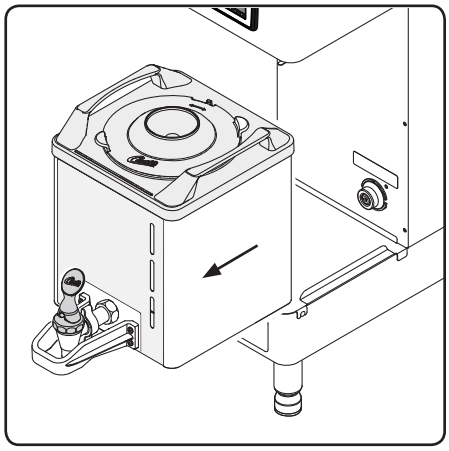

1 Remove the dispenser from the brewer and take it to a sink.

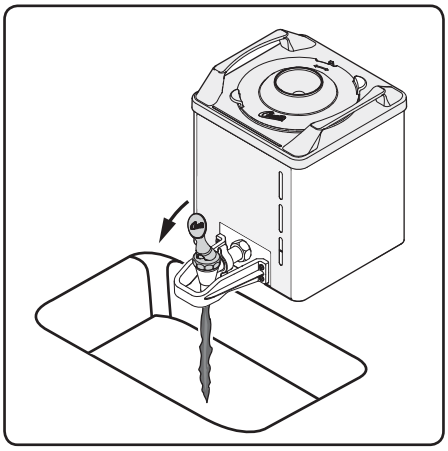

2 Discard the remaining coffee. Make sure that the dispenser is empty.

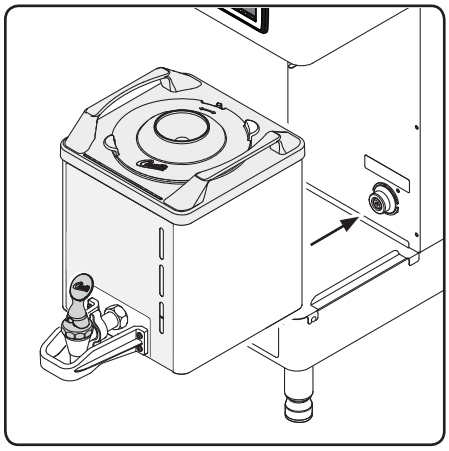

3 Place the dispenser on the brew deck. Make sure that the socket is connected.

4 Remove the brew basket from the brewer. Discard the filter and used coffee grounds.

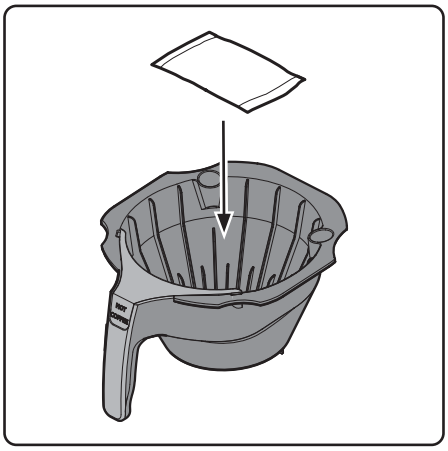

5 Lay one Kay Filter Pouch cleaner flat inside the brew basket.

6 Slide the brew basket all the way into the brew rails on the brewer.

continued...

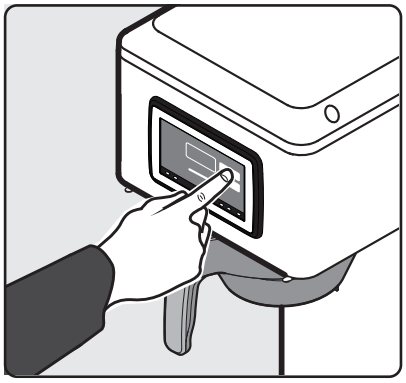

7 Press the brew button. Cleaning will begin immediately.

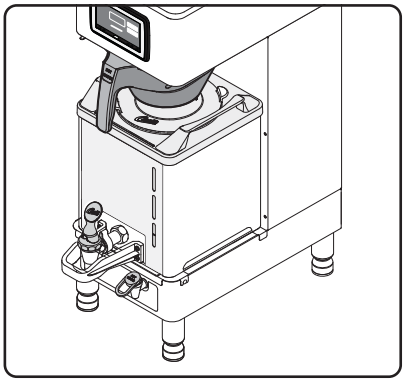

8 Allow the solution to sit for 10 minutes in the dispenser after the cycle is complete.

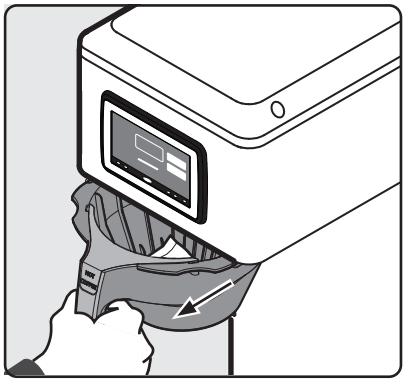

9 Remove the brew basket and discard the filter pouch.

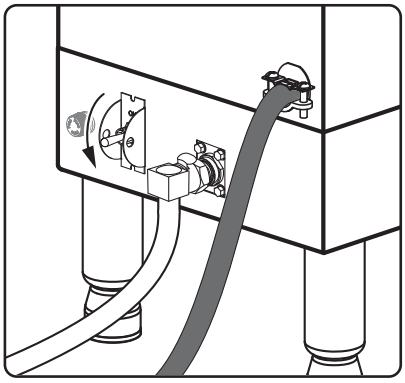

10 Turn the brewer off by turning the switch on the back of the unit to the OFF position.

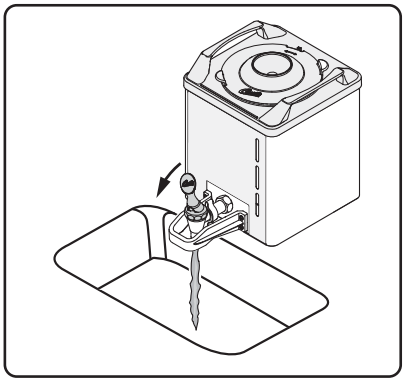

11 Remove the dispenser and take it to a sink. Dispense the blue cleaning solution through the faucet for 10 seconds, then remove the lid and dump the remaining solution out.

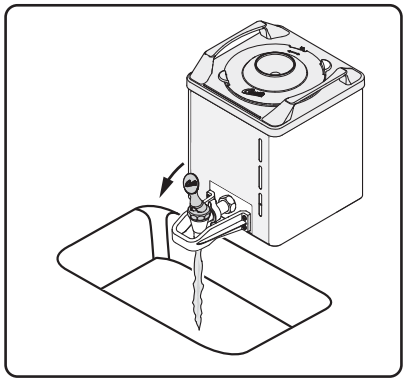

12 Fill the dispenser with warm, clean water. Dispense the water through the faucet for 10 seconds then dump out the remaining water.

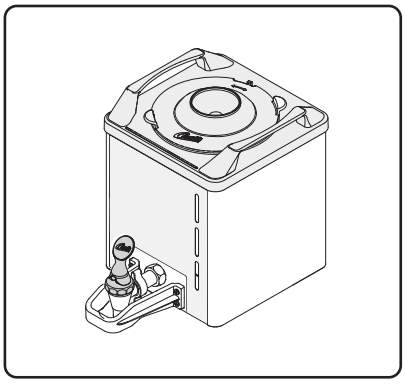

13 Fill the dispenser liner with a sanitizing solution suitable for food grade applications. Allow the liner to soak for the amount of time indicated in the directions on the package.

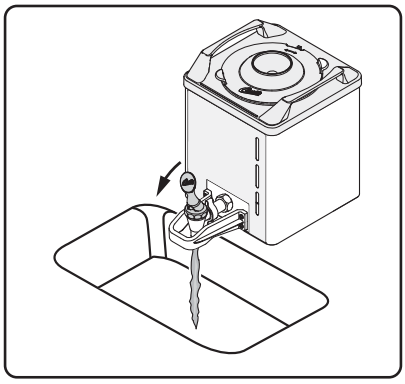

14 Dispense the sanitizing solution through the faucet for 10 seconds, then remove the lid and dump the remaining solution out. Air dry as indicated.

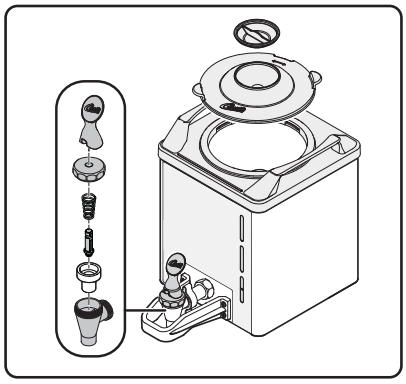

15 Detach and disassemble the dispenser faucet and lid.

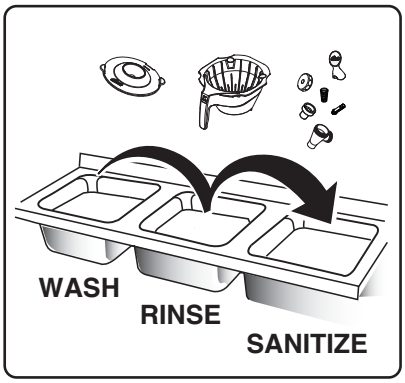

16 Wash all faucet parts, the dispenser lid and the brew basket in a mild solution of dish-washing detergent and warm water.

17 Thoroughly rinse all parts with clean, warm water.

18 After rinsing, place all faucet parts, the lid and the brew basket in a sink to be sanitized. Immerse them in a commercial sanitizer suitable for food grade applications. Sanitize according to the directions on the package.

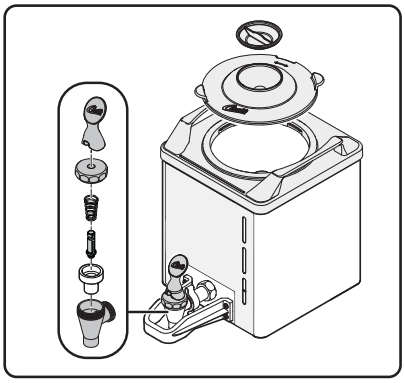

19 Allow all parts to thoroughly air dry, then reassemble the dispenser.

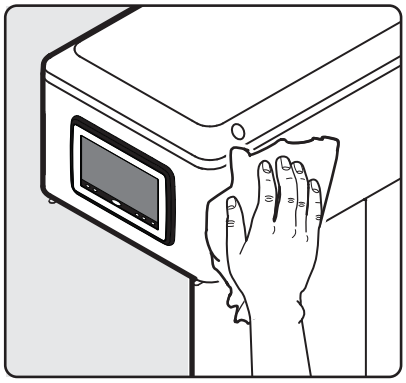

20 While the brewer is turned off and cool, wipe the exterior surfaces and spray head area with a damp cloth to remove debris.

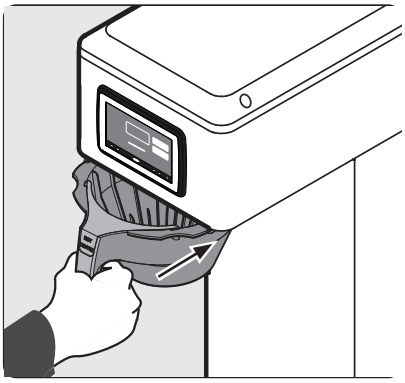

21 Slide the clean brew basket into the brew rails.

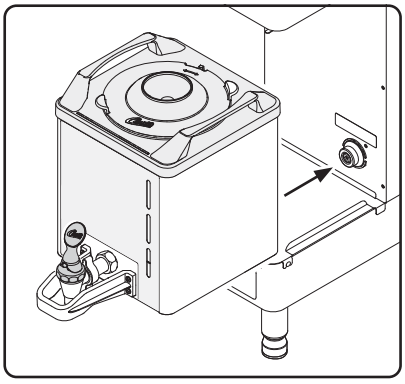

22 Place the clean dispenser on the brew deck. Make sure that the socket is connected.

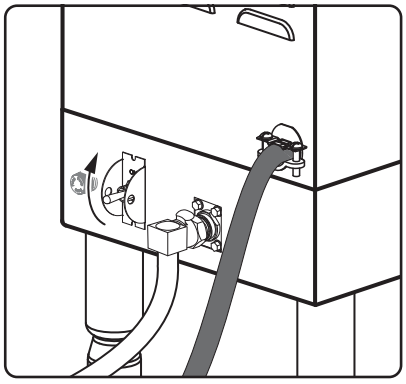

23 Turn on the main power toggle switch on the back. The brewer is ready to brew.

Touchscreen Control Module Overview

The touchscreen turns on whenever power is on. The symbol buttons on the screen control operation and programming. Pressing the on-screen symbols and buttons with your finger tip activates the various functions. The brewing screen and additional control buttons are shown below.

There are two methods for changing the factory default settings on G4 brewers. The settings can be programmed manually using the brewer touch screen or automatically using the USB (Universal Serial Bus) data port on the side of the brewer (see *Automatic Programming - USB*).

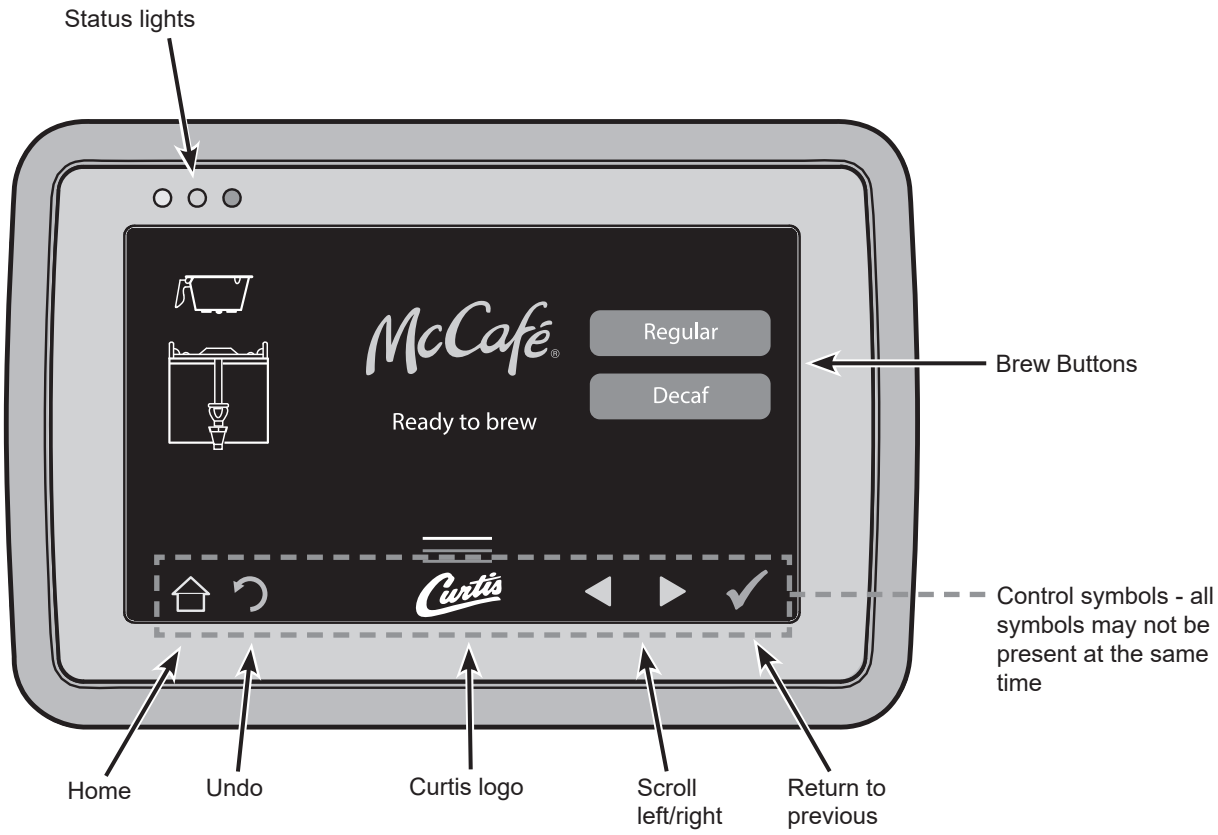

IMPORTANT: Programming changes should be performed only by someone who has knowledge of the custom McCafe recipes used by McDonald's. The McDonald's G4GEMX brewer leaves the factory set to the current McCafe custom recipes. Changing any of the brewer settings on the following pages may affect coffee taste.

Manual Programming Mode

1 Tap the (white) Curtis logo on the touchscreen five (5) times to enter programming mode.

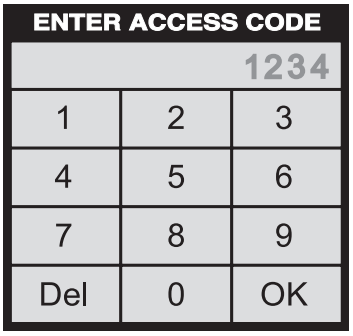

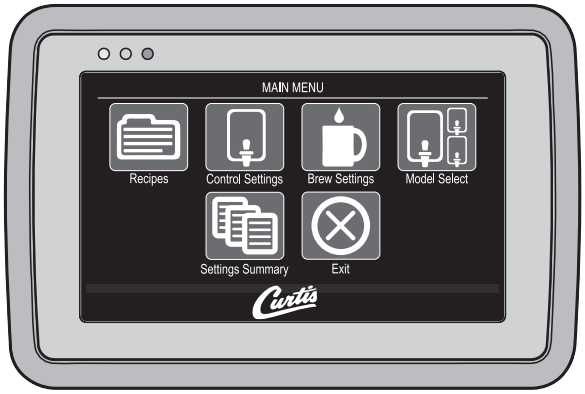

2 The ACCESS CODE screen will appear. The default code is 1 2 3 4. Enter the code and press OK. The access code can be reset in the Control Settings menu, under Passwords.

3 The MAIN MENU screen will appear. The MAIN MENU screen contains a series of sub-menu icons.

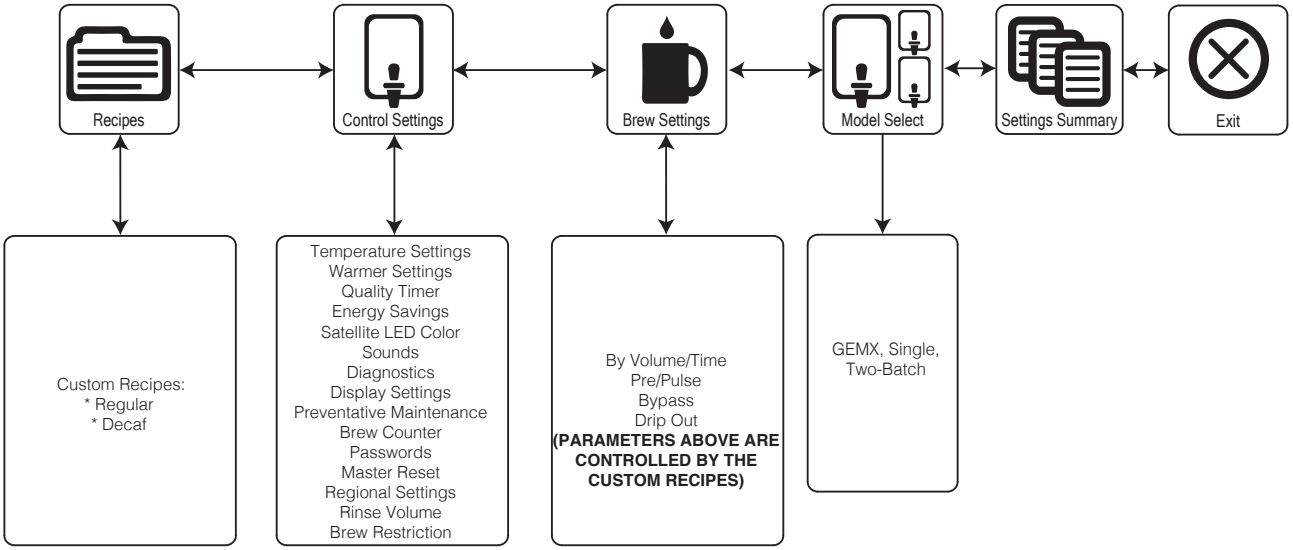

Recipes Menu

The factory default setting is Custom Recipe. Changing to another recipe type for McDonald's GEMX coffee machines is not recommended. Below are the current McCafe Custom Recipe settings regular and decaf as of the date of printing. Selecting the coffee type (other than the custom McCafe settings), sets the temperature and various brew settings for the brewer, to the factory recommended settings for that coffee recipe. If desired, the individual brew settings may be changed once the coffee type is selected. See the last page of the programming guide for instructions on how to increase or decrase the brew volume.

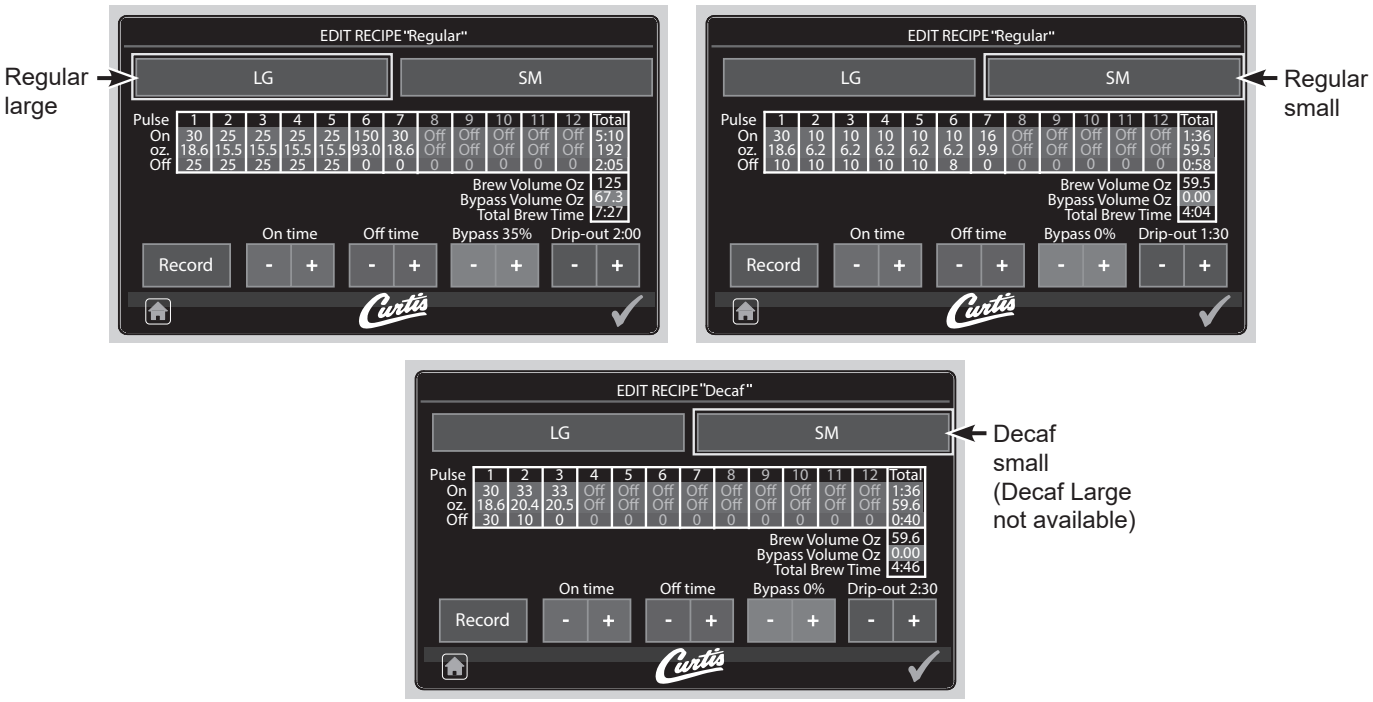

Control Settings Menu

Temperature - sets the brewing temperature of the water held in the water tank. The factory default setting is 200ºF/92°C. The setting range is 160ºF to 206ºF (71°C to 97°C).

Warmer Settings - sets the warmer power level. The available settings are HIGH (100%), MED (85%) or LOW (70%). The factory default setting is MED.

Quality Timer - is an audio alarm that notifies the user that the coffee is no longer fresh. The factory default setting is 1 hour. The setting range is 20 minutes to 3 hours, 50 minutes. The timer can also be completely disabled.

Energy Save Mode - saves energy during periods of non-use. The factory default setting is No Change. The setting options are no temperature change (energy saver mode off), turn off the heating element after four hours of non-use or reduce the heating element temperature to 140°F (60°C) after four hours of non-use.

Sounds - turns the beeper that is heard each time a button is pressed on or off. The factory default setting is On.

Diagnostics - Runs the system auto-test. See the *Troubleshooting Guide* for more details.

continued...

Control Settings Menu (cont.)

Display Settings

- **Brew Timer** - hides or shows the brew timer on the display. The factory default setting is Show.
- **Quality Timer** - hides or shows the quality timer display. The factory default setting is Hide.
- **Rinse Server Message** - hides or shows the “Rinse Server before Brewing” display message. The factory default setting is Hide.
- **Warmer Icon** - hides or shows the display warmer icon. The icon appears on the display when the warmer is on. The factory default setting is Hide.
- **Screen saver** - turns the display screen saver on and off. The factory default setting is On, set to images, idle time: 1Min.
- **Display Name** - changes the banner name that appears on the display. The factory default setting is blank.
- **Brew button icon** - switches the brew button icons that appear on the display between Original or Bags. The factory default setting is Original.

Preventive Maintenance

- **Maintenance Interval** - enables, disables or adjusts the preventive maintenance monitor. The factory default setting is Disabled. When Enabled, it measures the number of gallons brewed before the maintenance reminder appears on the display. The setting range is 1000 to 20,000 gallons (75,700 L).
- **Service Telephone Number** - sets the service phone number that appears on the display when the UCM detects an error condition. The factory default setting is 1-800-000-0000.

Brew Counter - When accessed, this feature displays the total number of brew cycles and the resettable brew cycle counter (number of brew cycles since last reset).

Passwords

- **Programming Password** - changes the programming menu password. The factory default is 1234. Always active.
- **Brew Password** - enables/disables the brew access password feature. The factory default is Disabled. This feature prevents brewing by unauthorized persons. When Enabled, the user selects an access code and the access code keypad appears on the screen when the brew button is pressed. The correct access code must be entered before brewing will proceed.
- **USB Password** - enables/disables the USB screen access password. The factory default is Disabled. This feature prevents access by unauthorized persons to the USB programming screens. When Enabled, the user selects an access code and the access code keypad appears on the screen when the user attempts to access the USB menus.

Master Reset - resets the brewer universal control module (UCM) to the factory default settings.

Regional Settings

- **SI/US** - switches the brewer unit settings between US and metric. The factory default setting is US.
- **Language** - changes the language that appears on the display. The factory default setting is English.

Satellite Color - changes the color scheme of the dispenser LEDs. The factory default settings are green for quality timer on and red for quality timer off.

Rinse Volume - turns the dispenser rinse options on and off. The factory default setting is Disabled. The setting range for rinse volume is 0 to 32 ounces.

Brew Restriction - enables/disables the dispenser lockout feature on the brewer. The factory default setting is Enabled. DISPENSER LOCKOUT appears on the display whenever one of three conditions exist; 1) the dispenser is not empty, 2) the dispenser is not properly seated on the brew deck or 3) the dispenser is cold.

Programming - USB

Using the USB connection and a flash drive easily reprograms the settings by simply copying data.

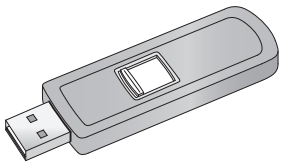

A flash drive can copy all of the settings from one identical G4 brewer to another. Doing so eliminates the need to program each step individually using the touchscreen. This process also makes it easy to quickly standardize the program settings on multiple G4 brewers.

Use a flash drive that supports USB 2.0 or above and has a type-A USB connection. The storage capacity must be 2 GB minimum.

IMPORTANT: The flash drive must be completely blank. Erase any existing files on the drive before starting the following process.

Downloading the Firmware and Screensaver to the Flash Drive

1 Download the latest version of the brewer's firmware and screensaver directly from the Curtis website. Use the following link to download the firmware: https://www.wilburcurtis.com/microsite/mcd/g4gemx/g4gemx-firmware.html

2 Insert a blank 2 GB or larger USB drive into your computer. **Note:** This process requires that a completely blank USB drive is used. Delete all files on the drive before proceeding.

3 Locate the firmware file and screen saver you downloaded onto your computer. They will be called "UCM1K.RFU" and "UCM1K.RSS". Copy these files to the flash drive. Do not attempt to rename these files, they will not work if the name is changed.

4 Eject the USB drive from your computer.

5 Insert the USB drive into the port on the upper right side of the brewer. **Note:** The brewer should be in normal operation mode, do not enter programming mode to use the steps below.

6 Once the drive is inserted, the brewer will begin the firmware update automatically. It will take approximately 5 minutes for the brewer to back up all files and then apply the firmware update. When the update is complete, the screen will display "Update downloaded - Remove USB flash". At this time, it is safe to remove the drive. Then the screen will prompt you to "Re-Insert the USB drive". At this time re-insert the USB drive.

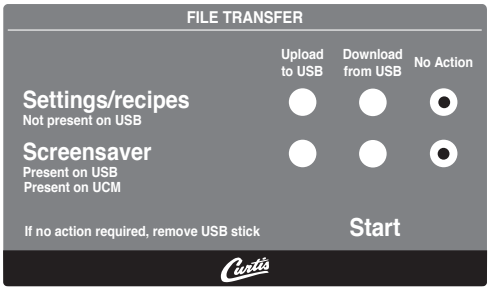

7 The image to the right will show after the USB drive has been re-inserted.

8 The default action is "No Action".

9 To transfer the screensaver, make sure the buttons are selected per the image to the right. Settings/recipe = "No Action", Screensaver = Download from USB". Then press start. The screensaver file will install. Once installed the screen will be the default screen as shown on page 14.

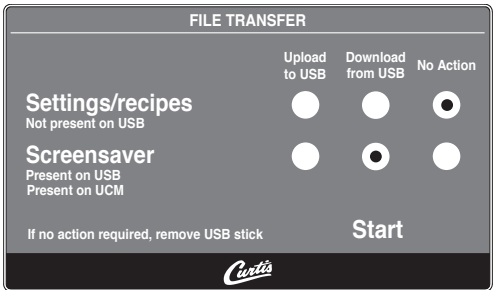

10 Perform a master reset: Enter programming by tapping the (white) Curtis logo on the touchscreen five (5) times, **-->** navigate to "control settings page 2 of 3", find "master reset", **-->** press the master reset icon, **-->** press reset, **-->** press "yes", the control will perform a reset and reboot..

11 To activate the screensaver: Enter programming by tapping the (white) Curtis logo on the touchscreen five (5) times, **-->** navigate to "control settings page 2 of 3", find "display settings", **-->** press the display settings icon, **-->** find "screensaver: Off", **-->** press the screensaver icon until "images" appear, **-->** then press the "green check mark icon" (lower right corner of the screen), **-->** then press the "home" icon (lower left corner of the creen) and then press the "exit icon".

To increase or decrease the Brew Volume

First determine if the volume needs to increase or decrease.

- Target volumes: Large = 192oz +/- 6oz @ 310 secs (5:10).; Small = 60oz +/- 4oz @ 96 secs (1:36).
- Perform a brew, measure the volume of that brew, then caculate the flow rate by taking the volume measured divided by the brew time (volume÷time); example: 182oz÷310secs = .59oz/sec.
- Now compare the volume measured to the target volume and determine if the time needs to be increased or decreased to obtain the target or taste profile; example: 192oz-182oz = 10oz, therefore the brew time needs to be increased by 15secs (192oz÷.59oz/sec = 325sec).

Method 1: Log into the programming screen (see page 2 of the programming guide), navigate to the 'brew settings' icon and press to enter, press the desired recipe (regular or decaf) on the right of the screen and the desired size (lg or sm) on the left of the screen, then press the 'by volume/time' icon to enter. The 'brew by volume/time' screen will now appear, select the desired size (lg or sm), then press the '+' to increase the seconds/volume or press the '-' to decrease the seconds/volume. (note: the green start icon and the red stop icon are disabled). Press the green check mark icon, then the home icon, then the exit icon.

Method 2: Log into the programming screen (see page 2 of the programming guide), navigate to the 'recipes' icon and press to enter, press the desired recipe (regular or decaf) on the right of the screen and then press the edit icon, (see page 3 of the programming guide). After selecting the desired recipe and size, select the last timed 'on pulse' (pulse 7 for large-regular, pulse 7 for small-regular; pulse 3 for small-decaf) to increase time '+' or decrease time '-'. Example: to increase the time by 15secs on recipe large-regular, locate pulse 7 (30secs) and change the time by pressing the '+' icon until 45secs. is reached.

G4GEMXSIFT - Single Coffee Brewer

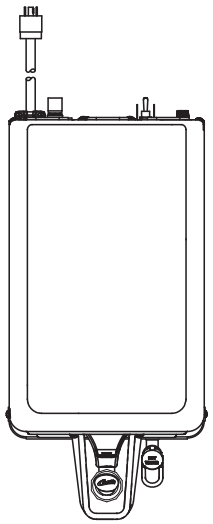

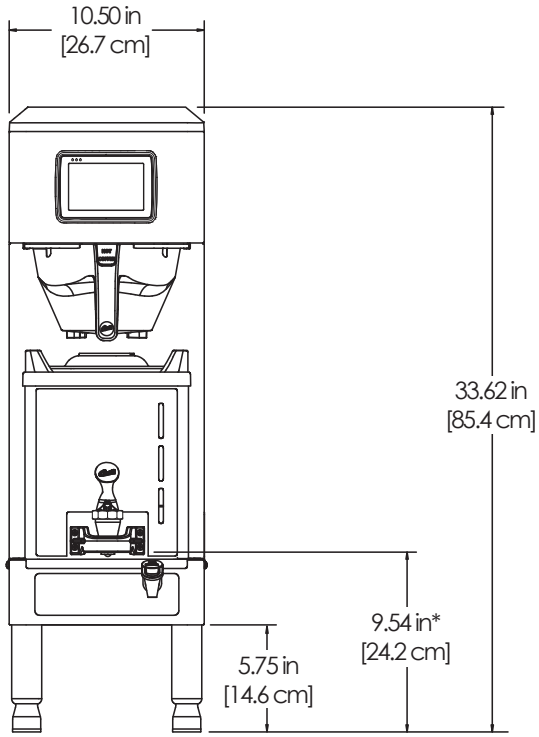

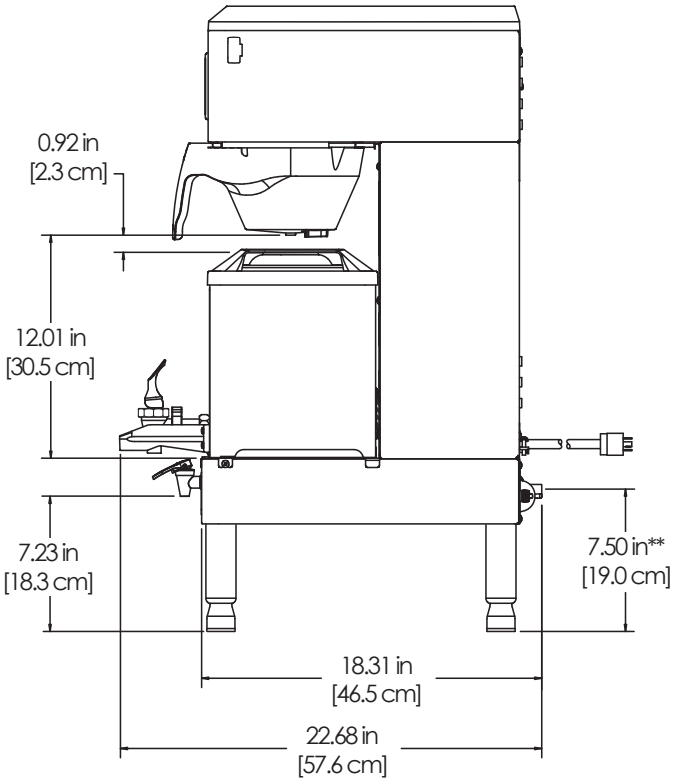

* Cup clearance
** Water Inlet

GEM3XIFT - Dispenser

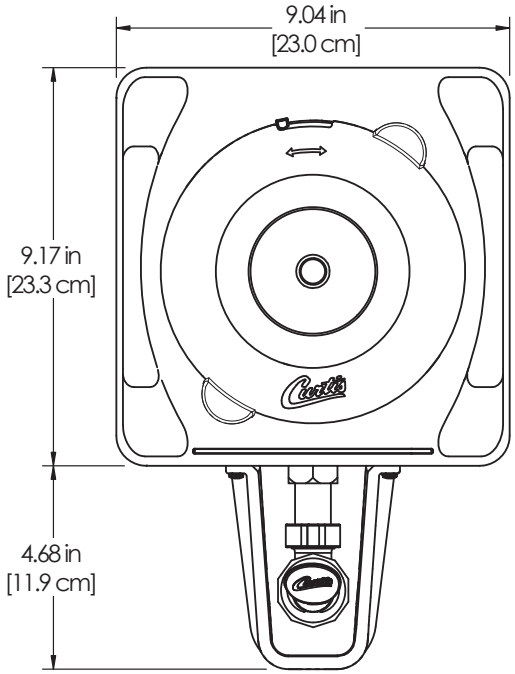

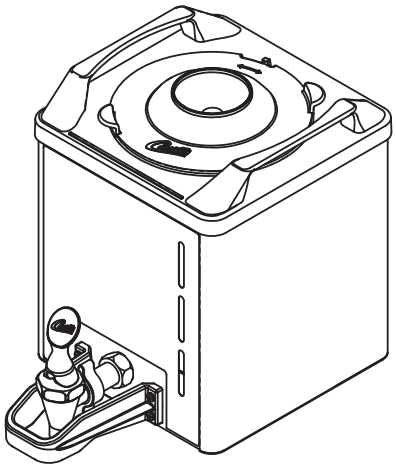

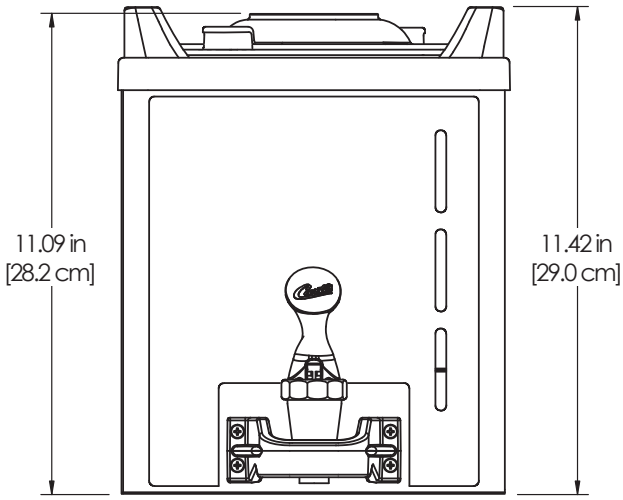

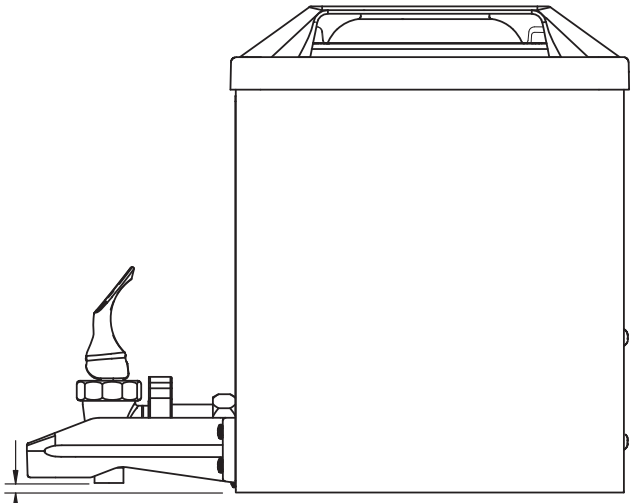

G4GEMXSIFTR10A026 - Main Chassis - Exploded View

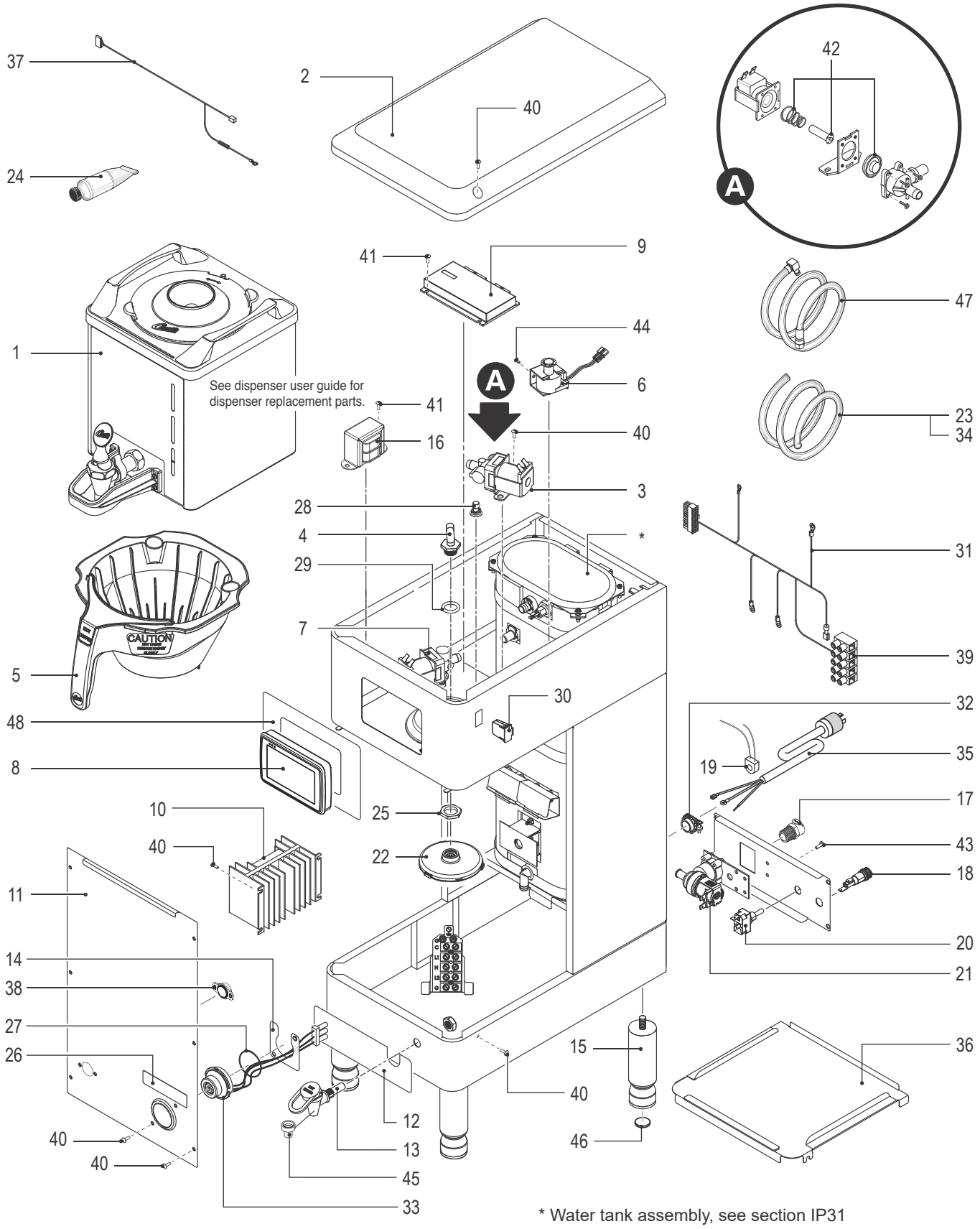

* Water tank assembly, see section IP31

G4GEMXSIFTR10A026 - Main Chassis - Parts List

ITEM #	PART #	DESCRIPTION
1	GEM3XRBA026	DISPENSER, GEMX
2	WC-66115	COVER, TOP GEMXSIFT
3	WC-820WDR*	VALVE, DUMP RIGHT 120V 12W W/INTERNAL RESISTOR & DIODE
4	WC-2977K*	KIT, SPRAYHEAD FITTING METAL
5	WC-3417-P	BREW CONE,ASSY W/SPLASH POCKET BRWN STYLIZED GEMIN HOT COFFEE
6	WC-442	SOLENOID, LOCK BREW CONE RIGHT/LEFT 120V TP2T/TP2S/GEMSS/GEM
7	WC-844-101	VALVE, BY-PASS, NON-ADJUSTABLE WITH RESTRICTOR (WC-2945)
8	WC-10000-108	CONTROL MODULE, TOUCH SCREEN G4 MCDONALDS
9	WC-10001	CONTROL MODULE, UPM 120/220V G4
10*	WC-8559	RELAY, SOLID STATE 280V/40A W/ HEATSINK AND QUICK DISCONNECTS
11	WC-58395-102	COVER, FRONT
12	WC-390605	LABEL, BOTTOM DECK GEMXSIFT MCDONALDS
13*	WC-1809-P	FAUCET, PS/HPS SERIES HOT WTR 1/2-20 UNF AP/ALP
14	WC-61963	PLATE, HOLDER IF CONNECTORS GEMTIF
15*	WC-3543	LEG,6in ADJUSTABLE 3/8-16 THRD, ITALIAN STYLE
16	WC-589-101	TRANSFORMER,120VAC-24V 4.8A W/ LEADS & MOLEX CONNECTOR
17*	WC-2467	COUPLING BODY, SHUTOFF 3/8 NPT CHROME PLATED ALP3GT15A826
18	WC-1501	FUSE, HOLDER ASSY W/5A FUSE
19	WC-14045-101	CURRENT SENSOR ASSY G4
20*	WC-103	SWITCH, TOGGLE NON-LIT DPST 25A 125/250VAC RESISTIVE
21	WC-847*	VALVE, INLET 2 GPM 120V 10W GEN USE BROWN BODY
22	WC-29050*	SPRAYHEAD, AMBER ADVANCED FLOW
23	WC-5310*	TUBE, 5/16 ID x 1/8W SILICONE
24	WC-5231*	COMPOUND, HEAT SINK 5OZ

ITEM #	PART #	DESCRIPTION
25	WC-4213-P	NUT, 5/8 LOCK PLATED
26	WC-38504	LABEL, WARNING SHOCK HAZARD INTELLI-FRESH
27	WC-43133	O-RING, 1.424ID X 1.630 OD X .103 WALL GEMIF's
28	WC-29044-101	SLEEVE, OVERFLOW
29	WC-4320	O'RING, 0.487I.D.x 0.693OD x0.103CS BUNA-N #112
30	WC-10008	UNIVERSAL HOST ADAPTER USB
31	WC-13463	HARNESS ASSY, G4GEMSS10/G4GEMS IF (INCLUDES TERMINAL BLOCK)
32	WC-1412	CORD GRIP, 3/4" FOR METAL CORD TO .81"OD
33	WC-571K-R	KIT, IF CONNECTOR- RIGHT
34	WC-5350	TUBE, 1/2 ID x 1/8W SILICONE GEN USE
35	WC-1226	CORD,600V 12/4 6ft W/NEMA PLUG LOCKING L14-20P
36	WC-65042-101	DECK, DISPENSER W/A
37	WC-13491	HARNESS ASSY,COMPLETE RESTRICT BREW GEMX SINGLE
38	WC-10047	MODULE, RECEIVER, RFID
39	WC-314	POWER BLOCK, 5 STATION
40	WC-4426	SCREW, 8-32x3/8 PH HEAD TRUSS
41	WC-4514	SCREW, 8-32x3/8 PAN HEAD PH SS
42	WC-37132-101	KIT, VALVE REPAIR FOR DELTROL WC-820WDR, WC-821WDR, WC-844WDR (NEWER UNITS)
43	WC-4616	SCREW, 1/4-20 x 1/2 PHILLIPS PAN HEAD STAINLESS STEEL
44	WC-4412	SCREW, 10-32x3/16" PH PN HD MS SS
45	WC-1806	SEAT CUP, SILICONE USE ON WC-1809 FAUCET
46	WC-3533	BUMPER, RUBBER 1in DIA.
47	WC-53169-60	TUBE ASSY, BRAIDED 1/4 FLARE X 60" LG W/ FITTINGS
48	WC-390616	LABEL, OUTER TOUCHSCREEN G4GEM XSIFT MACDONALDS

WC-62035 - Tank Assembly

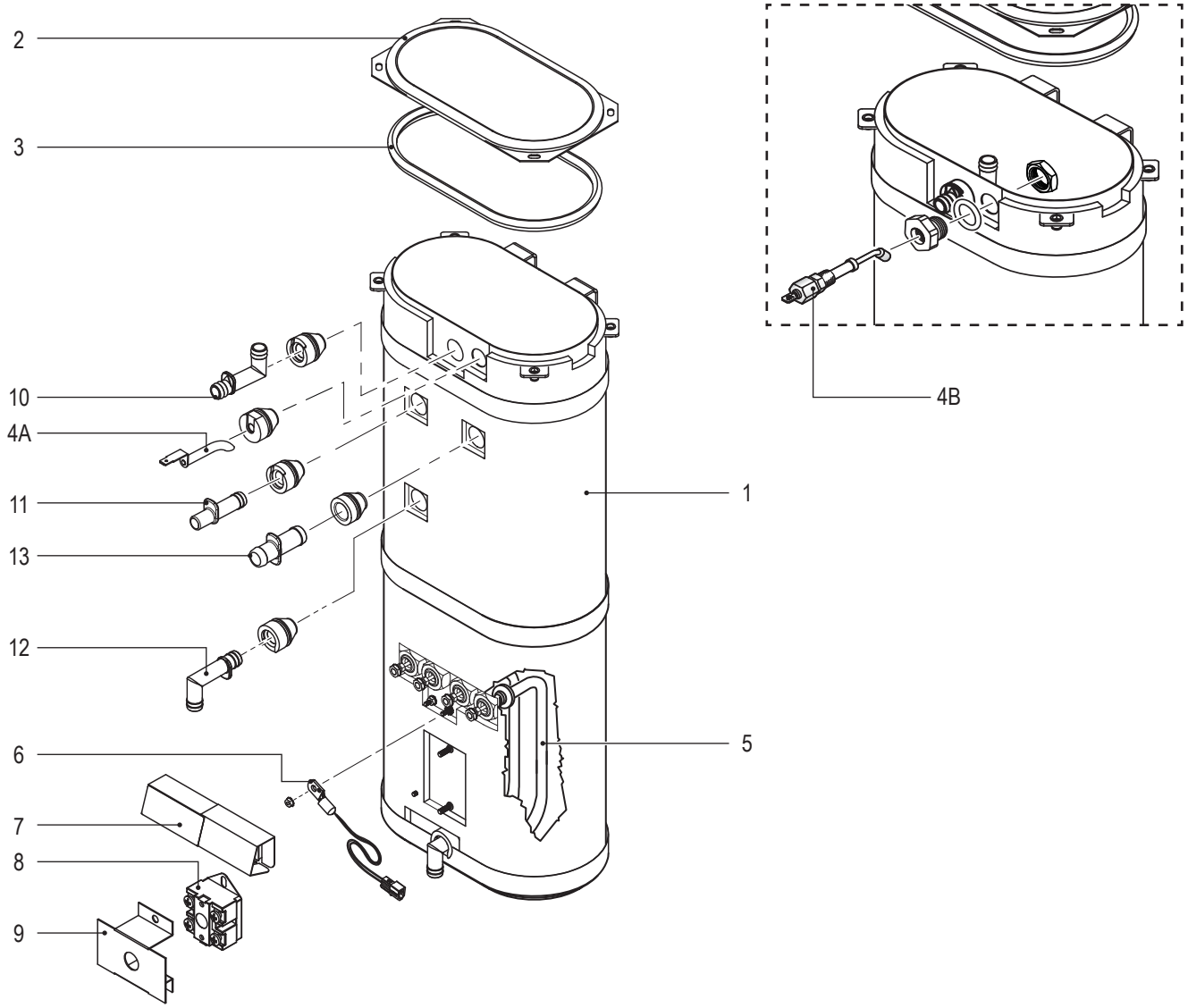

WC-62035 - Tank Assembly - Parts List

ITEM #	PART #	DESCRIPTION
1	WC-62035	TANK, COMPLETE GEMSS W/ULTEM FITTINGS
2	WC-5853-102	COVER, TOP HEATING TANK GEN USE
3*	WC-43062	GASKET, TANK LID
4A[1]	WC-5528K	KIT, WATER LEVEL PROBE, SILICONE
4B[2]	WC-5502-01	KIT, PROBE, ASSY WATER LEVEL W/HEX FITTING, O-RING & NUT
5*	WC-906-04	KIT, ELEMENT, HEATING 2KW 220V W/ JAM NUT & SILICONE O-RING
6*	WC-1438-101	SENSOR, TEMPERATURE TANK
7*	WC-4394	GUARD, SHOCK/HEATING ELEMENT FOR SINGLE HEATING ELEMENT

ITEM #	PART #	DESCRIPTION
8*	WC-522	THERMOSTAT, HI LIMIT HEATER CONTROL DPST 277V 40A
9*	WC-43055	GUARD, SHOCK RESET THERMOSTAT (WC-522)
10*	WC-37266	KIT, FITTING TANK OVERFLOW
11*	WC-37317	KIT, STRAIGHT FITTING & BUSHING 8mm GEN USE
12*	WC-37365	KIT, FITTING TANK INLET
13*	WC-37357	KIT, STRAIGHT PLASTIC FITTING AND BUSHING 12MM

[1] Units built 01/04/2019 and later.

[2] Units built before 01/04/2019.Replaces WC-5527.

* Recommended parts to stock.

G4GEMSIFTR10A3026

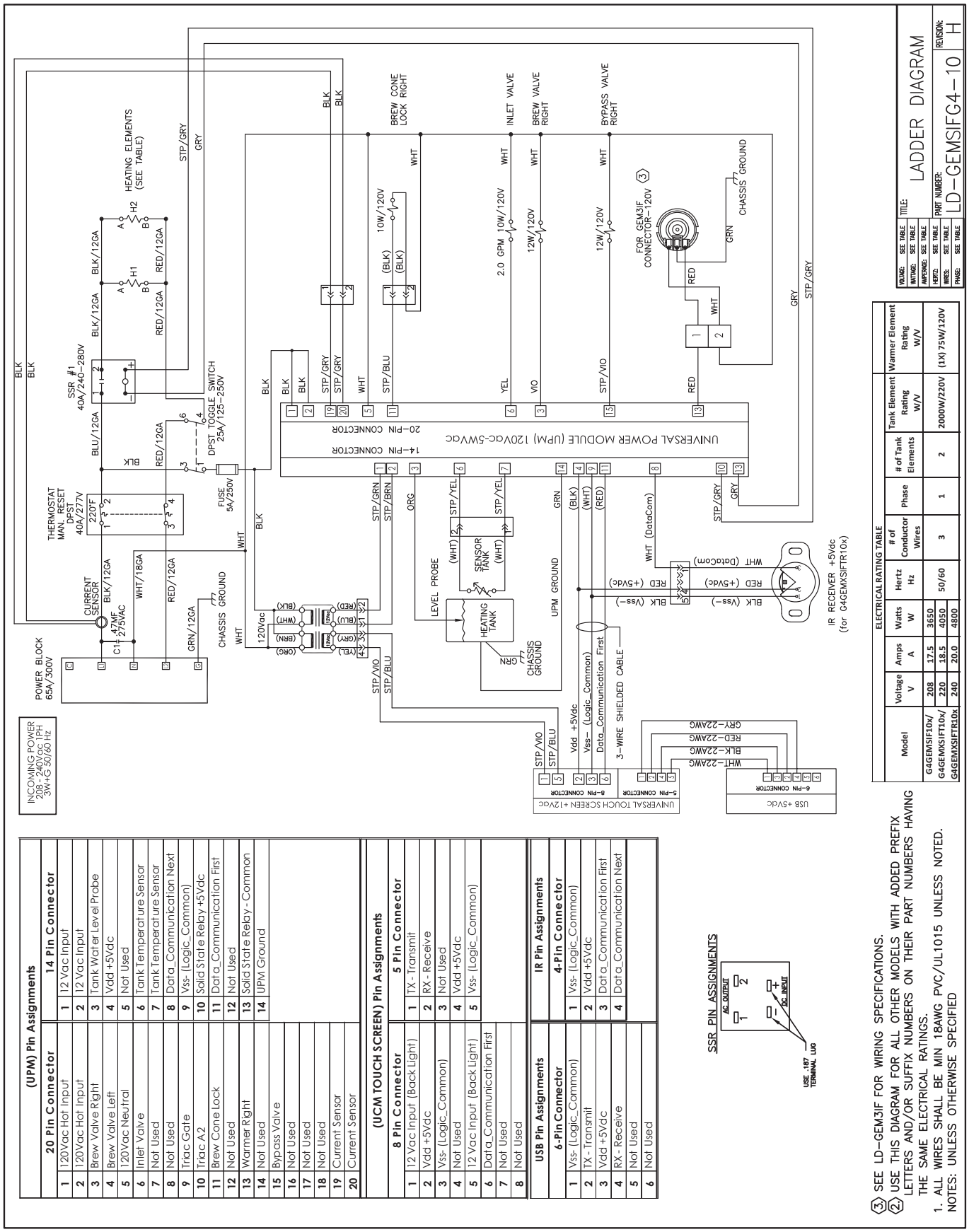

(UPM) Pin Assignments

	20 Pin Connector		14 Pin Connector
1	120Vac Hot Input	1	12 Vac Input
2	120Vac Hot Input	2	12 Vac Input
3	Brew Valve Right	3	Tank Water Level Probe
4	Brew Valve Left	4	Vdd +5Vdc
5	120Vac Neutral	5	Not Used
6	Inlet Valve	6	Tank Temperature Sensor
7	Not Used	7	Tank Temperature Sensor
8	Not Used	8	Data_Communication Next
9	Triac Gate	9	Vss- (Logic_Common)
10	Triac A2	10	Solid State Relay +5Vdc
11	Brew Cone Lock	11	Data_Communication First
12	Not Used	12	Not Used
13	Warmer Right	13	Solid State Relay - Common
14	Not Used	14	UPM Ground
15	Bypass Valve		
16	Not Used		
17	Not Used		
18	Not Used		
19	Current Sensor		
20	Current Sensor		

(UCM TOUCH SCREEN) Pin Assignments

	8 Pin Connector		5 Pin Connector
1	12 Vac Input (Back Light)	1	TX - Transmit
2	Vdd +5Vdc	2	RX - Receive
3	Vss- (Logic_Common)	3	Not Used
4	Not Used	4	Vdd +5Vdc
5	12 Vac Input (Back Light)	5	Vss- (Logic_Common)
6	Data_Communication First		
7	Not Used		
8	Not Used		

	USB Pin Assignments		IR Pin Assignments
	6-Pin Connector		4-Pin Connector
1	Vss- (Logic_Common)	1	Vss- (Logic_Common)
2	TX - Transmit	2	Vdd +5Vdc
3	Vdd +5Vdc	3	Data_Communication First
4	RX - Receive	4	Data_Communication Next
5	Not Used		
6	Not Used		

ELECTRICAL RATING TABLE

Model	Voltage V	Amps A	Watts W	Hertz Hz	# of Conductor Wires	Phase	# of Tank Elements	Tank Element Rating W/V	Warmer Element Rating W/V
G4GEMSIF10x/	208	17.5	3650	50/60	3	1	2	2000W/220V	(1X) 75W/120V
G4GEMXSIF10x/	220	18.5	4050						
G4GEMXSIFTR10x	240	20.0	4800						

(3) SEE LD-GEM3IF FOR WIRING SPECIFICATIONS.
(2) USE THIS DIAGRAM FOR ALL OTHER MODELS WITH ADDED PREFIX LETTERS AND/OR SUFFIX NUMBERS ON THEIR PART NUMBERS HAVING THE SAME ELECTRICAL RATINGS.
1. ALL WIRES SHALL BE MIN 18AWG PVC/UL1015 UNLESS NOTED.
NOTES: UNLESS OTHERWISE SPECIFIED

GEM3XR

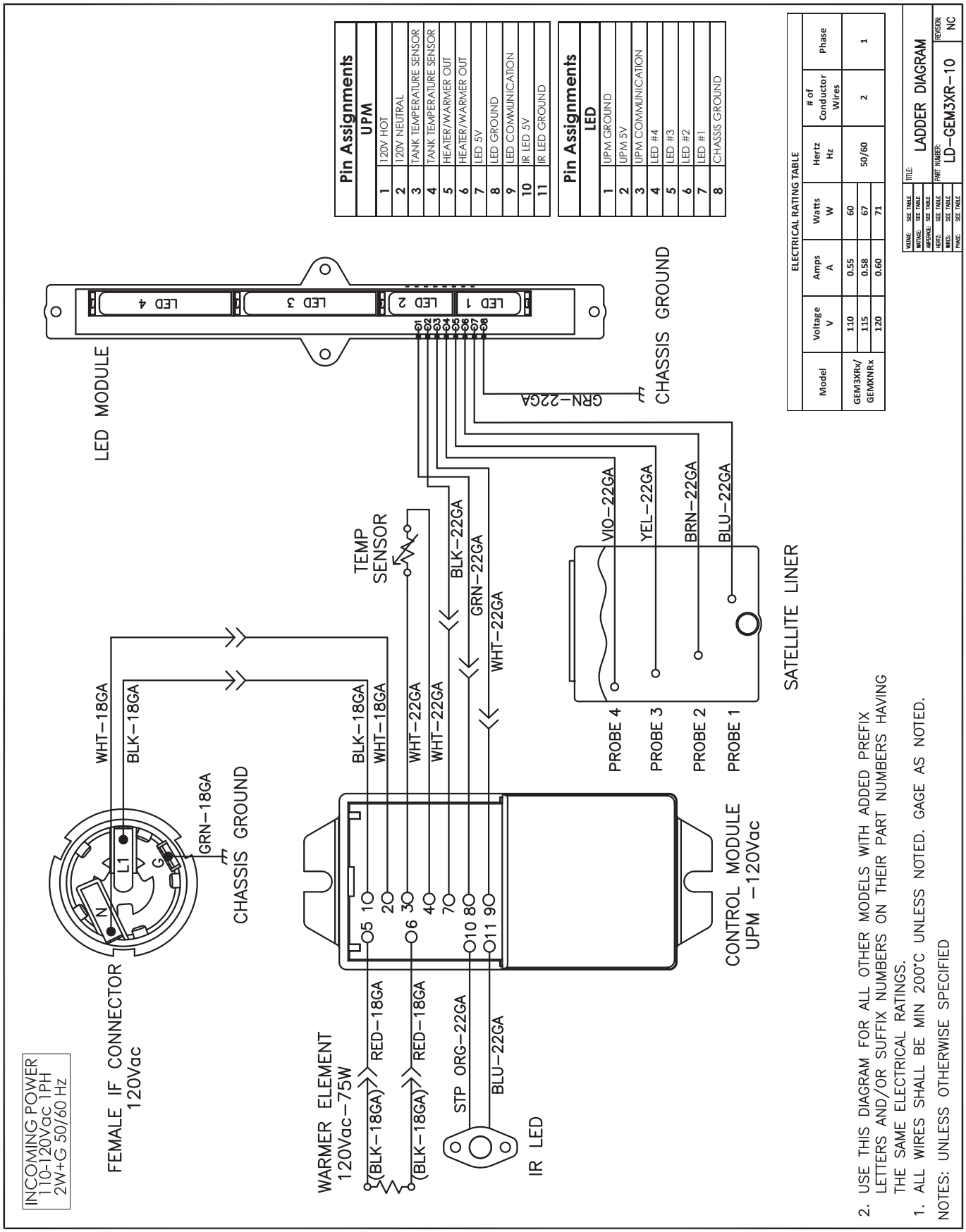
Pin Assignments
UPM
1 120V HOT
2 120V NEUTRAL
3 TANK TEMPERATURE SENSOR
4 TANK TEMPERATURE SENSOR
5 HEATER/WARMER OUT
6 HEATER/WARMER OUT
7 LED 5V
8 LED GROUND
9 LED COMMUNICATION
10 IR LED 5V
11 IR LED GROUND
Pin Assignments
LED
1 UPM GROUND
2 UPM 5V
3 UPM COMMUNICATION
4 LED #4
5 LED #3
6 LED #2
7 LED #1
8 CHASSIS GROUND
ELECTRICAL RATING TABLE
Model | Voltage V | Amps A | Watts W | Hertz Hz | # of Conductor Wires | Phase
GEM3XRx/GEMXNRx | 110 | 0.55 | 60 | 50/60 | 2 | 1
115 | 0.58 | 67
120 | 0.60 | 71
VOLTAGE: SEE TABLE
WATTAGE: SEE TABLE
AMPERAGE: SEE TABLE
HERTZ: SEE TABLE
WIRES: SEE TABLE
PHASE: SEE TABLE
TITLE: LADDER DIAGRAM
PART NUMBER: LD–GEM3XR–10
REVISION: NC
LED MODULE
LED 4
LED 3
LED 2
LED 1
CHASSIS GROUND
GRN–22GA
TEMP SENSOR
BLK–22GA
GRN–22GA
WHT–22GA
VIO–22GA
YEL–22GA
BRN–22GA
BLU–22GA
SATELLITE LINER
PROBE 4
PROBE 3
PROBE 2
PROBE 1
WHT–18GA
BLK–18GA
GRN–18GA
CHASSIS GROUND
BLK–18GA
WHT–18GA
WHT–22GA
WHT–22GA
CONTROL MODULE
UPM –120Vac
FEMALE IF CONNECTOR
120Vac
INCOMING POWER
110-120Vac 1PH
2W+G 50/60 Hz
WARMER ELEMENT
120Vac–75W
RED–18GA
RED–18GA
(BLK–18GA)
(BLK–18GA)
STP ORG–22GA
BLU–22GA
IR LED
2. USE THIS DIAGRAM FOR ALL OTHER MODELS WITH ADDED PREFIX LETTERS AND/OR SUFFIX NUMBERS ON THEIR PART NUMBERS HAVING THE SAME ELECTRICAL RATINGS.
1. ALL WIRES SHALL BE MIN 200°C UNLESS NOTED. GAGE AS NOTED.
NOTES: UNLESS OTHERWISE SPECIFIED

WARNING:

Electric Shock Hazard - the following procedures are to be performed only by a qualified service technician. Turn off power when replacing components. Neither Wilbur Curtis Co., Inc. nor the seller can be held responsible for the interpretation of this information, or any liability in connection with its use.

Scald and Burn Hazard - keep body parts clear of hot surfaces during troubleshooting.

IMPORTANT: If it is necessary to replace the G4 universal power module (UPM), always check all inlet, dump (brew), bypass* and dilution* valve coils for a short and replace the valve as necessary, before replacing the module. See the *Valve Test Procedure*, below to test for defective valves. *Some units do not have this function, see the ELECTRICAL SCHEMATIC.

Troubleshooting Guidelines

- If an error message appears on the display, consult the ERROR CODES section before troubleshooting.
- A brewer that is not level may not function properly. Make sure the brewer is properly leveled before proceeding.
- This troubleshooting guide identifies some, but not all, of the possible causes for common problems that can occur.
- Use this troubleshooting guide along with the appropriate ELECTRICAL SCHEMATIC.

Valve Test Procedure

Use a digital multi-meter to measure the resistance of valve coils.

Measure the resistance across the valve coil terminals with the wiring harness disconnected. Reverse the meter leads on the terminals and measure the resistance in the opposite direction. A resistance of less than 100 ohms, in either direction, indicates a shorted coil. The valve must be replaced.

If a shorted coil is not detected, test for an open coil:

1 Reconnect the valve terminals to the wiring harness.

2 Power up the brewer and test the valve using the diagnostics in section TG11.

Water Not Hot Enough

1 If the water heats, but is not hot enough, first check for the correct temperature setting on the control panel. Reprogram as necessary.

2 If the temperature setting is OK, and the actual water temperature does not match setting on the control panel, replace the temperature sensor.

Water Heats More Slowly Than Usual

1 Check for power across the terminals of the heating element(s). If power is being supplied, disconnect the heating element(s) and check for continuity. Replace a heating element if the resistance is too high (nominal resistance is 13 Ohms).

2 If there is no power to the heating element(s), check the wiring to any element that does not have the proper voltage across it. Also check for corroded connections anywhere between the power cord and the heating element(s).

Dispenser Overflows During Brewing

1 Check to make sure the control module (UCM) brew, bypass* and dilution* levels are set properly.

2 Check for a missing spray head. Replace as needed.

3 Make sure the dispenser is empty before starting the brew cycle. If not, empty it before brewing.

*Some units do not have this function, see the ELECTRICAL SCHEMATIC.

No Power - Display Not Lit

1 Make sure the circuit breaker to the circuit supplying power to the brewer is not tripped and is turned on.

2 On brewers with a power plug, make sure it is connected to the power receptacle.

3 Make sure that the main power toggle switch on the back panel is turned ON.

4 Verify that all wires from the power cord are properly connected inside the unit. Check to make sure the wires are not burned/overheated. Check chassis ground.

5 Check the low voltage input to the universal control module (UCM) from the transformer (see the ELECTRICAL SCHEMATIC). If there is power into the UCM, but the display is blank, the UCM is probably bad.

6 If there is no power into the UCM, trace the circuit back (using the wiring diagram) to the power cord to find out where power is lost. If there is power into the thermostat reset switch, but not out, see step 7.

7 If there is power into the thermostat reset switch, but not out, check to make sure that the water tank is not empty. If the tank is empty, the reset switch has probably opened up due to a low water level, go to ***Water Tank Does Not Fill***. If there is water in the tank, but no power out, push in on the reset switch button to see if it restores power. If power is restored, check to make sure that the switch is not opening up at the wrong temperature (the switch should not open up at normal water temperatures). If there is still no power through the switch after pushing the button, replace the thermostat reset switch.

Brewer Does Not Start When Brew Button is Pressed

1 If **Brewing** appears on the display, check for faulty wiring and connections between the universal power module (UPM) and the valves.

2 If **Brewing** does not appear on the display, check for a faulty universal control module (UCM) or universal power module (UPM).

Sensor Error Message

This error indicates a malfunction (open circuit) in the temperature sensor system. Once the malfunction is corrected, the error message must be cleared. To reset the brewer and return to normal operation, turn the toggle switch on the back of the brewer to the OFF position for 5 seconds, then back ON.

1 Check the resistance across the leads of the temperature sensor while it is disconnected from the universal power module (UPM). If an open circuit is measured (resistance above 200 k), replace the sensor.

2 If the sensor resistance is less than 200 k check the sensor wires for corrosion and reconnect them to the UPM. Afterward, if the error message comes back after resetting the control and power modules, replace the UPM.

Water Tank Overfills

1 Turn the toggle switch on the back of the brewer ON and OFF. If water continues to flow when the switch is in both positions, replace the inlet valve.

2 If water stop flowing to the water tank when the toggle switch is turned OFF and continues when the switch is turned back ON, remove the orange wire from the water probe on the tank. While power is ON, short the end of the orange wire to the metal surface on the outside of the tank. If the water tank stops filling when the orange wire is shorted to the tank, check for a corroded connection at the water probe.

3 If water does not stop flowing when the orange wire is shorted to the tank, check the tank ground connection and the continuity of the orange wire connecting to the universal power module (UPM). If both are OK, replace the UPM.

Water Tank Does Not Fill

IMPORTANT: No water or low water in the tank can cause the tank to overheat, resulting in the thermostat reset switch opening. If after correcting a tank fill problem there is no power to the control panel, push the reset switch button to reset.

1 Check to make sure the water supply is turned on. Check for a plugged water supply line or plugged inlet valve.

2 If there are no plugs in the water supply line, check for power across the inlet valve terminals. If power is being supplied, but there is no water flow, replace the inlet valve.

3 If power is not being supplied to the inlet valve, check the wires between the universal power module (UPM) and the inlet valve. Check for corroded connections.

4 If the wiring between the UPM and the inlet valve is OK, but there is no power to the inlet valve, remove the orange wire from the water tank probe. If the water tank starts to fill, replace the water probe. If the water tank does not start to fill, replace the UPM.

Coffee/Tea Too Strong

See *Dispenser Not Filled To Normal Level During Brewing*.

Dispenser Not Filled To Normal Level During Brewing

1 Check to make sure that the universal control module (UCM) brew, bypass* and dilution* levels are set properly.

2 Check to make sure that the flow rate and water pressure from the water supply line meet the minimum specifications for the brewer. See the SPECIFICATIONS section.

3 Check to make sure that the spray head is clean and free of debris. Clean or replace as needed. Also make sure that the spray head is correctly aligned and that the tubing is routed properly to allow for maximum water flow (no kinks).

4 Remove the brew basket and place a large container under the dump (brew) and dilution outlet points. Run a brew cycle and confirm that the dump (brew) valve, bypass* valve and dilution* valve open during the brew cycle. Check for flow through any exit point that is slow or non-existent. Not all valves open at the same time. If flow is restricted, check for obstructions in the related tubing or valve. If there are no obstructions, but flow through one particular valve is slow, it can be assumed that the particular valve is not opening all the way and should be replaced. If water does not flow at all through a particular valve during the brew cycle, check to make sure that power is being supplied to the valve in question. Replace any valve that is not opening when power is applied to the terminals. If power is not being supplied to the valve, check the wiring between the valve and the universal power module (UPM). If the wiring is OK, replace the UPM.

*Some units do not have this function, see the ELECTRICAL SCHEMATIC.

Dispenser Overflows <u>All Of The Time</u>

1 Check to see if water continues to flow from the spray head, the bypass* outlet or the dilution* spout when the toggle switch is turned OFF. Replace any valve that is stuck open.
*Some units do not have this function, see the ELECTRICAL SCHEMATIC.

2 If one or more of the valves mentioned in step 1 turns on when the toggle switch on the back is ON and turns off when the switch is OFF, replace the universal power module (UPM).

No Water/Tea Flows From Brewer During Brewing

1 Make sure that the water supply is turned on.

2 Check to see if the water in the tank is level with the water tank probe? If not, see *Water Tank Does Not Fill*.

3 If the water tank is full, the water is hot and power is on, but NO water flows during a brew cycle, the problem is usually a bad universal power module (UPM). Run a brew cycle and check for power from the UPM to the dump (brew), bypass* and dilution* valves. If there is no power output, replace the UPM.
*Some units do not have this function, see the ELECTRICAL SCHEMATIC.

Low Water Flow Warning

See *Water Level Error Message*.

Water Level Error Message

Water level fill error or overflow. This error message occurs when the inlet valve solenoid has been on too long during initial fill or tank refill, See the ERROR CODES section for the maximum times allowed. Once the malfunction is corrected, the error message must be cleared. To reset the unit and return to normal operation, turn the toggle switch on the back of the brewer to the OFF position for 5 seconds, then back ON.

1 Check to make sure that the flow rate from the water supply line meets the minimum flow rate specifications for the brewer. Also check the water pressure. See the SPECIFICATIONS section.

2 Check for blockage at the inlet valve inlet or outlet. Check for blockage in the tubing between the inlet valve and the water tank.

3 Check the water probe wire for an open condition or corroded connections.

4 If the probe connections are OK, cycle power to the unit by turning the rear toggle switch OFF, then ON. Check to see if power is applied to the inlet valve terminals. If power is applied to the terminals, but there is not water flow, replace the inlet valve.

5 Check for power from the universal power module (UPM) to the inlet valve. If the wiring is OK, replace the UPM.

“Internal Error 1” Message on Display

Check the wiring harness that connects from pins 4, 9 and 11 of the 14-pin connector on the universal power module (UPM) to pins 2, 3 and 6 of the 8-pin connector on the universal control module (UCM).

“Internal Error 2” Message on Display

The universal power module (UPM) and universal control module (UCM) have a mismatch in their settings. A firmware update is needed. See *PROGRAMMING GUIDE*.

Water Does Not Heat At All

- Check to see if the water level in the tank is in contact with the water level probe. If not, see *Tank Does Not Fill*. The water will not heat unless it is in contact with the probe.
- If the water heats, but is not hot enough, see *Water Not Hot Enough*.
- If **Ready to brew** appears on the display, but the water is not hot, check the resistance across the leads of the temperature sensor. If the resistance is less than 10 k and the water is not hot, replace the temperature sensor. If the sensor resistance is above 10 k when the water is cool, replace the universal power module (UPM).

If **Heating...** appears on the display, but the water is not hot, follow the steps below. The following steps are performed with the rear toggle switch in the ON position.

1 Check for power across the terminals of the heating element(s). If power is being supplied, remove the wires and check for an open heating element.

2 If there is no power to the element(s), trace the circuit back (using the ELECTRICAL SCHEMATIC) to the power cord to find out where power is lost. If there is power into the solid state relay(s) (SSRs) but not out, see the following step. On units having two SSRs, be sure to check both.

3 If there is power into a SSR, but not out, check for 5 Vdc (nominal*) across the + and - pins of the SSR(s). If there is 5 Vdc across the + and - pins of the SSR(s), but no (or low) output voltage at a SSR output terminal, replace the SSR. If 5 Vdc is not being supplied from the UPM, but **Heating...** appears on the display, check the wiring from the UPM to the SSR(s). If the wiring is OK, replace the UPM.

Water Too Hot (Boiling or Excessive Steaming)

IMPORTANT: Before proceeding, make sure that the control panel temperature is adjusted to compensate for higher elevations. The factory setting is 200°F. Reduce the temperature setting two degrees for every 1000 feet of elevation above 4000 feet.

1 If **Over Temp Sensor** or **Ready to Brew** appears on the display and the water is too hot, go to *Over Temp Sensor Error Message*.

2 If the display reads **Heating** constantly, first check to make sure that the temperature sensor is attached tightly to the tank and that heat sink compound was used. A properly mounted sensor should have a resistance of around 7 k when the water is hot. If not, replace the sensor.

3 Check to see if the universal power module (UPM) constantly has +5 Vdc (nominal) output to the solid state relay (SSR), regardless of the resistance of the temperature sensor. If so, the UPM is probably bad.

4 If the UPM is working properly, check for a shorted SSR.

Over Temp Sensor Error Message

This error message indicates that the universal control module (UCM) has detected a water overheating problem. The universal power module (UPM) is reading a water temperature in the tank above 210°F. If the water temperature is too hot, but **Heating...** appears on the display, see *Water Too Hot*. Once the malfunction causing the error is corrected, the error message must be cleared. To reset the brewer and return to normal operation, turn the toggle switch on the back of the brewer to the OFF position for 5 seconds, then back on.

1 Check for 5 Vdc (nominal) across the + and - pins of the solid state relay (SSRs). If no power is applied to the SSR and the heating elements are always on, replace the SSR. On units having two SSRs, check both.

2 Turn off power to the brewer and allow the water tank to cool. Once cool, turn power back on while monitoring the voltage across the + and - pins of the SSR(s). During normal operation, the voltage should be 5 Vdc, until the water is hot, then drop to below 1 Vdc. The universal power module (UPM) should be replaced if the voltage reads 5 Vdc constantly even though **Ready to brew** or **Over Temp Sensor** appears on the display.

3 If the UPM is operating normally, check for a false over-temp error caused by the temperature sensor. Check the resistance across the leads of the temperature sensor. If the resistance is less than 10 k when the water is cool, replace the temperature sensor.

Dispenser Does Not Heat

NOTE: The dispenser heating element is designed to keep brewed coffee hot, but is not of sufficient wattage to reheat cold coffee.

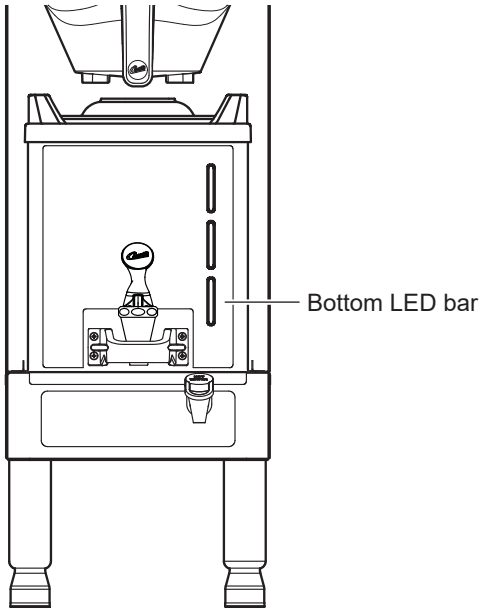

1 First check to see if the bottom LED bar on the dispenser is flashing a “blue” error code.
- Three long, one short = defect in heating element circuit.
- Three long, two short = defect in controller sensor circuit (replace the controller).

2 Check to see if the Intellifresh® LED on the front of the dispenser flashes green when docked with the unit (flashes red during brew cycle). If neither the LEDs nor the warmer come on, then it can be assumed that there is no power to the dispenser. Make sure that power is being supplied to the Intellifresh (IF) connector on the brewer when the BREW button is pressed. The voltage varies based on the model, see the *ELECTRICAL SCHEMATIC*. If power is present at the connector, check the connector contacts. If power is not present at the IF connector, trace the circuit back to the control module to see if it is supplying power to the IF connector.

3 Check the contacts on the dispenser IF connector to make sure that they are making good contact with the connector on the brewer.

4 If the dispenser is receiving power from the IF connector and there are no dispenser error codes, suspect the dispenser controller.

None of the LED Bars Light, Regardless of Coffee Level (Warmer is Working OK)

NOTE: If the dispenser is empty, the LED bars will not light.

1 Check for chassis ground, UPM ground and UPM 5 Volts into the LED array (see LED pin assignment on dispenser schematic).

2 If power and ground are being supplied to the LED array and none of the LED sections come on when the dispenser is full, the LED array is probably bad.

Some LED Bars Do Not Light

Short the probe wire for the LED section that is not working to ground. If the section lights, check the probe connection. If the section does not light, the LED array is bad.

One or More LED Bars are Constantly On Regardless of Coffee Level

1 Clean the inside of the dispenser according to the *CLEANING INSTRUCTIONS* section to remove any residue build-up that may be causing a malfunction (especially around the sensors).

2 Check for a probe wire that is shorted to ground.

3 If the probe wires are OK, suspect the LED array.

IntelliFresh Feature Does Not Work (Warmer OK)

1 Check to make sure that the UCM IntelliFresh settings on the brewer are correct.

2 Check the continuity of the dispenser controller/LED communication wire.

3 Replace the LED module. If the IntelliFresh feature does not work properly after replacing the LED module, the dispenser control module is probably bad.

continued...

“DISPENSER LOCKOUT” Appears On Display

1 Check to make sure that the dispenser is empty, properly seated on the brew deck and has had time to warm up. These conditions can cause a DISPENSER LOCKOUT notification.

2 Place a different, known good, empty dispenser on the brew deck. Wait to make sure that the dispenser has warmed up. If “DISPENSER LOCKOUT” disappears when a properly seated dispenser is allowed to warm up, the first dispenser is defective; skip to step 4.

3 If “DISPENSER LOCKOUT” always appears on the display, regardless of the dispenser used, check the brewer IR sensor and wiring harness for continuity. If the IR sensor and harness are OK, suspect the brewer universal power module (UPM).

The following steps assume that the DISPENSER LOCKOUT message is being caused by a malfunction in a particular dispenser.

4 The problem can be caused by a defective coffee level sensor (the controller thinks there is coffee in the liner). Check for a shorted/defective sensor; see *One or More LED Bars are Constantly On Regardless of Coffee Level.*

5 The problem can be caused by a defective heating element circuit (dispenser never warms, which causes the lockout). See *Dispenser Does Not Heat.*

6 Check the IR sensor and wiring harness for continuity. If the IR sensor and harness are OK, suspect the dispenser controller.

Overview

The G4 control module diagnostics can be used to detect electrical circuit failures in the brewer. When a circuit failure is identified, the individual components and wiring in the circuit must be checked to determine the exact cause of the failure using the ELECTRICAL SCHEMATIC. If a failure is not detected using the diagnostics, troubleshoot the problem according to the symptoms listed in other sections of this TROUBLESHOOTING GUIDE.

The diagnostics can also be used to help diagnose certain mechanical failures. See the following steps.

Using the Diagnostics

1 Enter programming mode by tapping the (white) Curtis logo on the touchscreen five (5) times.

2 Enter the access code, then press **OK** (the default code is 1 2 3 4).

3 The **MAIN MENU** screen will appear. Press **Control Settings**.

4 Press **Diagnostics**. When prompted, place an empty container under the brew basket, then press **OK**.

5 Press a button to test the desired circuit or **Auto Test** to test all circuits. If a button is highlighted green the circuit has passed the (electrical) test. If the button is highlighted red, the circuit has failed the test.

If the circuit tested fails, check to make sure that power is being supplied to the component during normal operation. If power is supplied, and it does not operate, replace the component. If power is not being supplied, check the wiring and the UPM.

If a valve circuit passes the test, check for a mechanical failure by listening for the valve to “click” when the test button is pressed. To check for a failed pump, run a brew cycle and check for fluid flow through the pump.

Display view varies with model

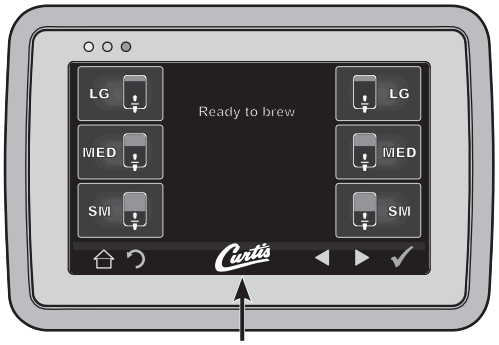

Curtis logo

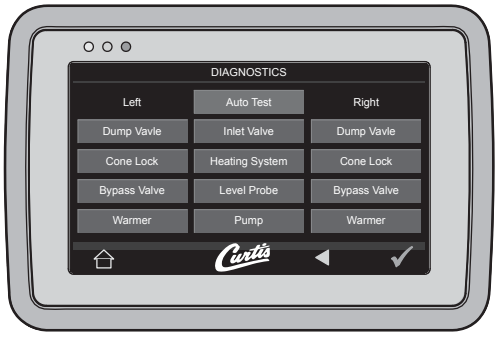

Diagnostics Screen

Button layout varies based on model

Warning Messages - Allows Brewer to Continue Brewing

MESSAGE DISPLAY	WARNING DESCRIPTION	CAUSE
Maintenance Required	Maintenance Required	Brew count “Gallons Since Reset” exceeds programmed preventative maintenance period.
Low Water Flow Warning	Low Water Flow	If the Inlet valve remains on longer than XX seconds (during the brew cycle only) and repeats TWICE during that brew cycle. It shall clear upon the next brew and if the same low flow exists again, it will re-appear. XX = Alpha 20 secs; Gem/TP Twin 40 secs; Gem/TP Single 30 secs.
Internal Error 2	UPM-UCM have a mismatch in their settings.	UPM-UCM have a mismatch in their settings, firmware update needed.

Error Messages - Brewer Will Stop Brewing

MESSAGE DISPLAY	ERROR DESCRIPTION	CAUSE
Water Level Error	Fill run error/Overflow	The water inlet valve has either been open for more than 10 minutes on the initial tank fill or has been open for 120 seconds on large brewers and 30 seconds on CGC, Seraphim®, tea, or combo brewers in normal operation.
Sensor Error	Open Sensor	Break in the temperature thermistor circuit or short circuit.
Over Temp. Error*	Excess Temperature	The sensor is reading that the temperature in the heating tank has risen above 210ºF, or the sensor has shorted to ground.
Internal Error 1	UPM-UCM Communication	Break in the UPM-UCM communication circuit.

* This error is disabled on CGC and Seraphim® models.

Configuration Error Message - Brewer Will Not Function Properly

MESSAGE DISPLAY	ERROR DESCRIPTION	CAUSE
Configuration Error	UPM software revision does not support the model selected.	The universal power module (UPM) has an old software version and is not compatible with the brewer model in which it has been installed.

Wilbur Curtis Co., Inc. certifies that its products are free from defects in material and workmanship under normal use. The following limited warranties and conditions apply:

3 years, parts and labor, from original date of purchase on digital control boards
2 years, parts, from original date of purchase on all other electrical components, fittings and tubing
1 year, labor, from original date of purchase on all other electrical components, fittings and tubing

Additionally, Wilbur Curtis Co., Inc. warrants its grinding burrs for four (4) years from the date of purchase. Stainless steel components are warranted for two (2) years from the date of purchase against leaking or pitting. Replacement parts are warranted for ninety (90) days from the date of purchase or for the remainder of the limited warranty period of the equipment in which the component is installed.

All in-warranty service calls must have prior authorization. For authorization, call the Technical Support Department at 800-995-0417. Additional conditions may apply. Go to www.wilburcurtis.com to view the full product warranty information.

CONDITIONS & EXCEPTIONS

The warranty covers original equipment at time of purchase only. Wilbur Curtis Co., Inc., assumes no responsibility for substitute replacement parts installed on Curtis equipment that have not been purchased from Wilbur Curtis Co., Inc. Wilbur Curtis Co., Inc. will not accept any responsibility if the following conditions are not met. The warranty does not cover:

- **Adjustments and cleaning:** *The resetting of safety thermostats and circuit breakers, programming and temperature adjustments are the responsibility of the equipment owner. The owner is responsible for proper cleaning and regular maintenance of this equipment.*
- **Replacement of items subject to normal use and wear:** *This shall include, but is not limited to, spray heads, faucets, light bulbs, shear disks, "O" rings, gaskets, silicone tubing, silicone elbows, canister assemblies, whipper chambers and plates, mixing bowls, agitation assemblies and whipper propellers.*

The warranty is void under the following circumstances:

- **Improper operation of equipment:** *The equipment must be used for its designed and intended purpose and function.*
- **Improper installation of equipment:** *This equipment must be installed by a professional technician and must comply with all local electrical, mechanical and plumbing codes.*
- **Improper voltage:** *Equipment must be installed at the voltage stated on the serial plate supplied with this equipment.*
- **Improper water supply:** *This includes, but is not limited to, excessive or low water pressure and inadequate or fluctuating water flow rate.*
- **Damaged in transit:** *Equipment damaged in transit is the responsibility of the freight company and a claim should be made with the carrier.*
- **Abuse or neglect (including failure to periodically clean or remove lime accumulations):** *The manufacturer is not responsible for variation in equipment operation due to excessive lime or local water conditions. The equipment must be maintained according to the manufacturer's recommendations.*
- **Unauthorized repair or modification:** *This equipment must be serviced only by qualified service technicians, using factory specified parts to factory specifications.*
- **Modified/Missing Serial Tag:** *The serial number label (tag) must not be defaced or removed.*

Repairs and/or Replacements are subject to Curtis' decision that the workmanship or parts were faulty and the defects showed up under normal use. All labor shall be performed during regular working hours. Overtime charges are the responsibility of the owner. Charges incurred by delays, waiting time, or operating restrictions that hinder the service technician's ability to perform service is the responsibility of the owner of the equipment. This includes institutional and correctional facilities. Wilbur Curtis Co., Inc. will allow up to 100 miles, round trip, per in-warranty service call.

Return Merchandise Authorization (RMA): All claims under this warranty must be submitted to the Wilbur Curtis Technical Support Department prior to performing any repair work or return of this equipment to the factory. **All returned equipment must be properly re-packaged in the original carton and received by Curtis within 45 days following the issuance of a RMA.** No units will be accepted if they are damaged in transit due to improper packaging. **NO UNITS OR PARTS WILL BE ACCEPTED WITHOUT A RETURN MERCHANDISE AUTHORIZATION (RMA). THE RMA NUMBER MUST BE MARKED ON THE CARTON OR SHIPPING LABEL. All warranty claims must be submitted within 60 days of service. Invoices will not be processed or accepted without a RMA number. Any defective parts must be returned in order for warranty invoices to be processed and approved.** All in-warranty service calls must be performed by an authorized service agent. Call the Wilbur Curtis Technical Support Department to find an agent near you.